Panasonic®

Digital IGBT Controlled MIG/MAG Arc Welding Power Source

Operating Instructions

Model No. YD-350GL4
YD-500GL4

Thank you for your purchase of Panasonic welding power source.

Before operating this product, please read the instructions carefully and save this manual for future use.

SPEC. No: YD-350GL4HGN、YD-500GL4HGN

TSM50447

Caution for your safety

Read and understand this manual before installing, operating or servicing this product.

The wiring and grounding should be done by educated and/or skilled person.

This equipment and instructions are for use only by persons trained and experienced in the safety operation of welding equipment. Do not allow untrained persons to install, operate, or maintain this equipment.

Cautions about electromagnetic disturbance

- Extra precaution may be required when welding power source is used in a domestic establishment.
- Before installing welding equipment ,the user shall make an assessment of potential Electromagnetic problems in the surrounding area as below.
  a) Other supply cables, control cables, signaling and telephone cables; above, below and adjacent to the welding equipment;
  b) Radio and television transmitters and receivers;
  c) Computer and other control equipment;
  d) Safety critical equipment , e.g. guarding of industrial equipment;
  e) The health of the people around , e.g. the use of the pacemaker and hearing aids;
  f) Equipment used for calibration or measurement;
  g) The immunity of other equipment in the environment; the user shall ensure that other equipment being used in the environment is compatible ;this may require additional protection measures;
  h) The time of day that welding or other activities are to be carried out.
- The user shall be observe to reduce emission disturbance as below.
  a) Welding equipment should be connected to mains supply according to the manufacture's recommendations.
  b) Welding equipment should be routinely maintained according to the manufacture's recommendations.
  c) The welding cables should be kept as short as possible and should be positioned close together, running at or close to the floor level.
  d) Confirm to connection of all metallic component in the welding installation and adjacent to it should be considered for safety.
  e) The work-piece should be connected to earth for electric safety.
  f) Selective screening and shielding of other cables and equipment in the surrounding area may alleviate problems of interference. Screening of entire welding installation may be considered for special applications.

Exporting the machine into the EU

This product does not meet the requirements specified in the EC Directives which are the EU safety ordinance. Please bear in mind that this product may not be brought as is into the EU. The same restriction also applies to any country which has singed the EEA accord. Please be absolutely sure to consult with us before attempting to relocate or resell this product to or in any EU member state or any other country which has signed the EEA accord.

■ **Features**

- **LED digital display and soft-touch buttons for easy and convenient operation**
- **The wire feeder equipped with encoder provides stable and high-precision wire feeding control.**
- **The welding parameters can be recorded & called.**
- **The enhanced mobility, robust structure and dust tightness**

■ **The applicable welding methods**

CO_2 welding, MAG welding, pulse MAG welding, stainless steel MIG welding and stainless steel pulse MIG welding.

Note: 【 Deepen 】 function is an optional software package. The test welding for this function can last for 3 hours (☞ Section 5.4), after setting P menu. If you are willing to continue this function, please contact Distributor to activate this function.

welding methods								
welding wire material	welding method	shielding gas	pulse ON/OFF	wire diameter (mm)	extension length (mm)		root welding	Deepen
					semi-automatic	automatic welding		
carbon steel	CO_2	100%CO_2	DC pulse OFF	0.8	HND	10	○	×
				1.0	HND	15	○	×
				1.2	HND	15, 20	○	×
				1.4	HND	25	×	×
				1.6	HND	30	×	×
	MAG	Ar+20%CO2	DC pulse OFF	0.8	HND	10	○	×
				1.0	HND	15	○	×
				1.2	HND	15, 20	○	●
				1.4	HND	25	×	●
				1.6	HND	30	×	●
			DC pulse ON	0.8	HND	10	×	×
				0.9	HND	15	×	×
				1.0	HND	15	×	×
				1.2	HND	15, 20	×	×
				1.4	HND	25	×	×
				1.6	HND	30	×	×
carbon steel flux core	CO_2	100%CO2	DC pulse OFF	1.2	HND	20	×	×
				1.4	HND	25	×	×
				1.6	HND	30	×	×
stainless steel (SUS308)	MIG	Ar+2.5%CO2	DC pulse OFF	0.8	HND	×	×	×
				1.0	HND	×	×	×
			DC pulse ON	0.8	HND	10	×	×
				1.0	HND	15	×	×
				1.2	HND	15, 20	×	×
				1.6	HND	30	×	×
stainless steel (SUS430)	MIG	Ar+2.5%CO2	DC pulse ON	1.0	HND	15	×	×
				1.2	HND	15, 20	×	×
stainless steel flux core	MIG	Ar+2.5%CO2	DC pulse ON	1.2	HND	20	×	×
stainless steel flux core	CO2	100%CO2	DC pulse OFF	1.2	HND	×	×	×

Note: × stands for no data, ○ stands for standard configuration data, ● for the chargeable data.

Note: for machine configuration, please refer to the section 4.1 & 4.2.

Table of Contents

1. About safety

1.1 Safety precautions

Read this manual carefully to use the machine properly. The cautions mentioned in this manual and on the product are important to operate the machine properly and prevent hazardous situation and damage to you and other personnel.
This document classifies all of these hazardous conditions into three levels, namely Danger, Warning or Caution, and indicates these levels by using symbols. Those Dangers, Warnings, Cautions as well as Mandatory Actions and Prohibitions mentioned must be followed without fail. It is also important to ensure that equipment functions correctly at all times. * The warning symbols and signal phrases are also used on the warning labels attached on the machine.

Warning symbol	Signal phrase	Description	Warning symbol	Signal phrase	Description
	Danger	A hazardous accident including death or serious personal injury is imminent, if directions are not followed carefully.		Mandatory Action	Action which MUST be performed without fail, such as grounding.
	Warning	The potential for a hazardous accident including death or serious personal injury is high, if directions are not followed carefully.		Prohibition	Action which MUST NOT be performed.
	Caution	The potential for hazardous accident including medium-level or light personal injury and/or the potential for property damage to the equipment are high if, directions are not followed carefully.	The above warning symbols are commonly used.		

“Serious personal injury” refers to loss of eyesight, burns (high-temperature and low-temperature burn), electrical shock, bone fractures and gas poisoning, as well as those that leave after-effects, which require hospitalization or necessitate medical treatment for an extended period of time. “Medium-level and light personal injury” refers to burns, electrical shock and injuries which do not require hospitalization or necessitate medical treatment for an extended period of time. “Property damage” refers to extensive damage to the surrounding items and equipment.

1.2 Safety instructions that must be observe

	WARNINGS

Welding power source

	Observe the following instructions to prevent the hazard.

(1) Never use the welding power source for other than welding purpose. (e.g. Never attempt to use the welding power source for pipe thawing.)

(2) It is very important to comply with all instructions, safety warnings, cautions and notes mentioned. Failure to do so can result in serious injury or even death.

(3) Work of driving source at the input side, selecting work site, handling, storage and piping of high pressure gas, storage of welded products and also disposal of waste should be performed according to the operating instruction and national, state and local codes and regulations.

(4) Prevent any unauthorized personnel to enter in and around the welding work area.

(5) Only educated and/or skilled persons who well understand this welding power source should install, operate, maintain and repair the unit.

(6) Only educated and/or skilled persons who well undersand the operating instruction of the unit and are capable of safe handling should perform operation of the unit.

Against electric shock

	Observe the following instructions to prevent the hazard.

(1) Grounding of the case of the welding power and base metal or a jig electrically connected to the base metal must be performed by educated and/or skilled persons.

(2) Before installation or maintenance work, turn off power at the power box, wait it for at least five minutes to discharge capacitors. Significant voltage may exist on capacitors after turning off power at the power box so it is imperative to check to make sure that no charged voltage present at capacitors before touching any parts.

(3) Do not use undersized, worn, damaged or bare wired cables.

(4) Connect cables completely and insulate connection parts.

(5) Keep all cases, panels and covers securely in place.

(6) Do not handle the welding power source with torn or wet gloves.

(7) Wear safety harness in case of working above floor level.

(8) Turn off all equipment when not in use.

(9) Perform periodic checks without fail and repair or replace any damaged parts before using the power source.

(10) In case of AC arc welding in a confined area or above floor level, check related national, state and local codes and regulations for any special treatment and comply with it if any.

Ventilation and protective equipment

	Oxygen deficit, fume and gas generated during welding can be hazardous.

(1) When conducting welding in the bottom of the tank, boiler or hold as well as legally-defined sites, use a local exhauster specified by the applicable laws and regulations (occupational safety and health regulation, rules on preventing suffocation or etc.) or wear protective breathing gear.

(2) To prevent dust injury or poisoning by the fume generated during welding, use a local exhauster specified by the applicable law (occupational safety and health regulation, rules on preventing injury by inhaled dust or etc.), or wear protective breathing gear.

(3) When conducting welding in a confined area, make sure to provide sufficient ventilation or wear protective breathing gear and have a trained supervisor observe the workers.

(4) Do not conduct welding at a site where degreasing, cleaning or spraying is performed. Conducting welding near the area where any of these types of work is performed can generate toxic gases.

(5) When welding a coated steel plate, provide sufficient ventilation or wear protective breathing gear. (Welding of coated steel plates generates toxic fume and gas.)

Against fire, explosion or blowout

	Observe the following cautions to prevent fires explosion or blowout.

(1) Remove any combustible materials at and near the work site to prevent them from being exposed to the spatter. If they cannot be relocated, cover them with a fireproofing cover.

(2) Do not conduct welding near combustible gases.

(3) Do not bring the hot base metal near combustible materials immediately after welding.

(4) When welding a ceiling, floor or wall, remove all flammables including ones located in hidden places.

(5) Properly connect cables and insulate connected parts. Improper cable connections or touching of cables to any electric current passage of the base metal, such as steel beam, can cause fire.

(6) Connect the base metal cable at a section closest to the welding part.

(7) Do not weld a sealed tank or a pipe that contains a gas.

(8) Keep a fire extinguisher near the welding site for an emergency.

	**CAUTIONS**

Installing shielding (curtain etc.)

	Arc flash, flying spatter and slugs generated during welding can damage your eyes, skin and hearing.

(1) When welding or monitoring welding, wear safety glasses with sufficient light blocking performance or use a protective mask designed for welding operation.

(2) Wear protective glasses to protect your eyes from spatter or slugs.

(3) When welding or monitoring welding, wear protective clothes designed for welding operation, such as leather gloves, leg cover and leather apron, and also wear long-sleeve shirts.

(4) Install a protective curtain around the welding manipulator site to prevent the arc flash from entering the eyes of people in the surrounding area.

Gas cylinder and gas flow regulator

	Overturn of gas cylinder and blowout of gas flow regulator can cause injury.

(1) The gas cylinder must be handled properly according to the applicable law and in-house standards.

(2) Use the gas flow regulator that is supplied or recommended by our company.

(3) Read the instruction manual of the gas regulator prior to using it, observe the cautions in the manual

(4) Secure the gas cylinder to a dedicated gas cylinder stand.

(5) Do not expose the gas cylinder to high temperature.

(6) When opening the valve of the gas cylinder, do not bring your face close to the discharge outlet.

(7) When the gas cylinder is not used, be sure to install a protective cap.

(8) Do not hang the welding torch on the gas cylinder, or touch the gas cylinder with the electrode.

Rotating parts

	Rotating parts can cause injury.

(1) Keep away from rotating parts such as cooling fans, feed roller of the wire feeder, or hand, finger(s) hair or part of your clothes may be caught by the parts resulting in injury.

(2) Keep all covers, panels and cases closed when using the product.

(3) Maintenance work and repair should be perform only by educated and/or skilled persons who thoroughly understand welding machines. While performing maintenance or repair work, provide fence or the like around the welding machine so that unauthorized person can not come close carelessly.

Welding wire

	Welding wire, especially wire tip part can cause injury.

(1) Do not perform inching operation or pull the torch switch with your eyes, face or body close to the end of the welding torch - wire extends out from the end of the welding torch and may stick into the eye, face or body.

(2) In case of using a torch cable with the resin liner, straighten the torch cable and reduce the preset feed amount (current) to a half or less before applying the wire inching.

(3) Make sure to replace any damaged liner or cable with a new one as use of damaged liner/cable may cause gas leak or insulation deterioration.

Against insulation deterioration

	Insulation deterioration can cause fire of welding power source.

(1) Keep enough distance from welding power source when performing welding or grinding work so as to prevent such spatters or iron particles from getting into the power source.

(2) Perform check and maintenance work periodically so as to prevent insulation deterioration due to accumulated dust or dirt.

(3) When spatters or iron particles get into the welding power source, turn off the power switches of the welding power source and power distribution box, and then blow out.

2. Rated Specifications

2.1.1 Rated specifications for YD-350GL4HGN/YD-500GL4HGN

Item	Unit	Contents	
		YD-350GL4HGN	YD-500GL4HGN
Control method	-	digital IGBT control	
Rated input· Number of phases	-	380 VAC (Allowable fluctuation range:304V to 437V)	
Input power frequency	Hz	50/60	
Rated input capacity	kVA/kW	17.6/13.5	29.9/23.9
Output characteristics	-	CV(constant voltage characteristics)	
Rated output current	A	DC 350	pulse OFF: DC 500 pulse ON: DC 400
Rated output voltage	V	31.5	39
Rated duty cycle	%	60	
Rated output no-load voltage	V	DC 80	
Output current range (※Note)	A	DC 40~430	pulse OFF: DC 60~500 pulse ON: DC 60-400
Output voltage range (※Note)	V	16~35.5	pulse OFF: 17~39 pulse ON: 17~34
Welding method	-	individual / unitary	
Enclosure protection class	-	IP23S	
Insulation class	-	main transformer 155 ℃(inductor 200 ℃)	
EMC classification	-	A Grade	
Cooling method	-	forced air cooling	
Applicable welding wire type	-	flux core / solid	
Applicable welding wire diameter	mm	solid 0.8/1.0/1.2/1.4/1.6	
	mm	flux core carbon steel 1.2/1.4/1.6 flux core stainless steel 1.2/1.6	
Welding wire material	-	carbon steel / carbon steel flux core / stainless steel / stainless steel flux core	
Memory	-	100 channels can be called, welding parameters recordable	
Sequence	-	welding / welding — crater / initial — welding — crater / spot welding	
Shielding gas	-	CO_2 welding CO_2: 100 % MAG welding Ar: 80 %, CO_2: 20 % MIG welding Ar:98%, O_2:2%	
Gas check time	-	60 s (longest gas check time)	
Pre-flow time	-	0 s–5.0 s continuous adjustment (0.1s increment)	
After-flow time	-	0 s–5.0 s continuous adjustment (0.1s increment)	
Spot welding time	-	0.3 s–10.0 s continuous adjustment (0.1s increment)	
Overall dimensions	mm	692×380×612(LXWXH)	772×380×612(LXWXH)
Mass	kg	68	75

(Note): For the details, refer to section “Applicable arc characteristics table on the inside front cover.

2.1.2 Duty cycle for YD-350GL4

- The rated duty cycle for this product is 60%.
  "The duty cycle is 60% at the rated output" means that for 60 percent of the ten minute period (6 minutes), the power source can maintain operation with an output of 350A without overheating. The remaining four minutes must be operated at no-load to allow proper cooling.
- When using the product in combination with other devices, such as the welding torch, etc., use it at the lowest rated duty cycle among those devices

Note

Using a product at a duty cycle over the rated duty cycle may cause the increase of equipment temperature over the permissible maximum, as a result, the lamp to indicate the "abnormal rise in temperature" is turned on.

- IGBT, DCL and some diodes of this unit are protected with "Thermal protector". The error "Err 3: Abnormal rise in temperature" occurs when the temperature of those units exceeds the allowable temperature.

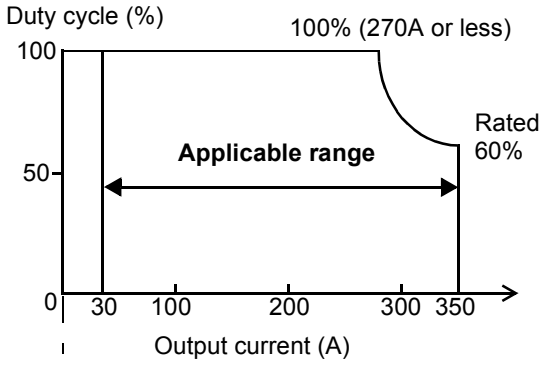

* When an output other than rated value is used.

$$\text{Allowable duty cycle (\%)} = \left(\frac{\text{Rated output current}}{\text{Actual output current}}\right)^2 \times \text{Rated duty cycle (\%)}$$

For your reference:
Duty cycle: The percentage ratio of loading time to full time. A cycle of the full time shall be 10 minutes.
Rated duty cycle: means the rate of use when loading the rated output current intermittently at the rated input voltage of the rated frequency. Regarding the engine-driven welding power unit, however, it means when driving it at the rated number of revolution.

2.1.3 Dimensions for YD-350GL4

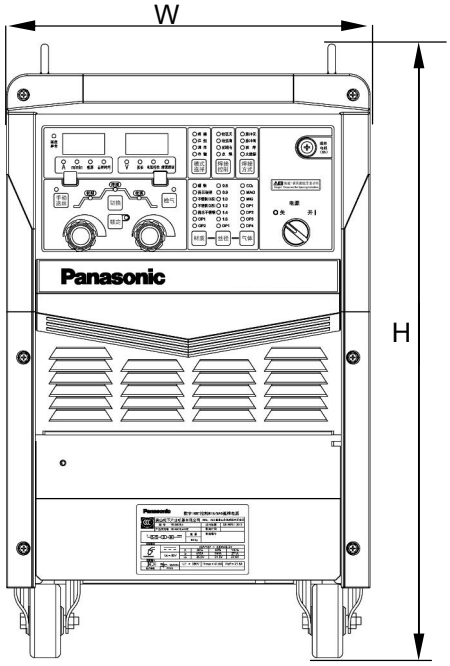

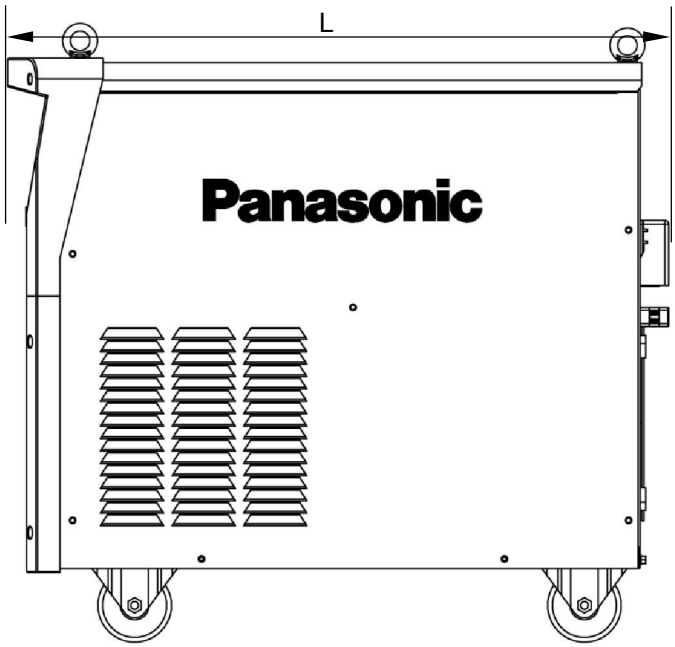

机型	W	H	D
YD-350GL4HGN	380	612	692

（单位：mm）

2.2.2 Duty cycle for YD-500GL4

- The rated duty cycle for this product is 60%.
  "The duty cycle is 60% at the rated output" means that for 60 percent of the ten minute period (6 minutes), the power source can maintain operation with an output of 500A without overheating. The remaining four minutes must be operated at no-load to allow proper cooling.
- When using the product in combination with other devices, such as the welding torch, etc., use it at the lowest rated duty cycle among those devices

Note

Using a product at a duty cycle over the rated duty cycle may cause the increase of equipment temperature over the permissible maximum, as a result, the lamp to indicate the "abnormal rise in temperature" is turned on.

- IGBT, DCL and some diodes of this unit are protected with "Thermal protector". The error "Err 3: Abnormal rise in temperature" occurs when the temperature of those units exceeds the allowable temperature.

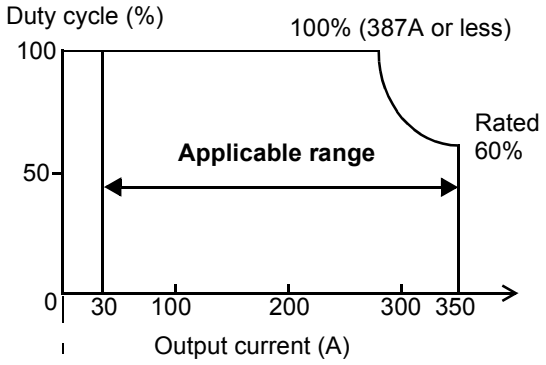

* When an output other than rated value is used.

$$\text{Allowable duty cycle (\%)} = \left(\frac{\text{Rated output current}}{\text{Actual output current}}\right)^2 \times \text{Rated duty cycle (\%)}$$

For your reference:
Duty cycle: The percentage ratio of loading time to full time. A cycle of the full time shall be 10 minutes.
Rated duty cycle: means the rate of use when loading the rated output current intermittently at the rated input voltage of the rated frequency. Regarding the engine-driven welding power unit, however, it means when driving it at the rated number of revolution.

2.2.3 Dimensions for YD-500GL4

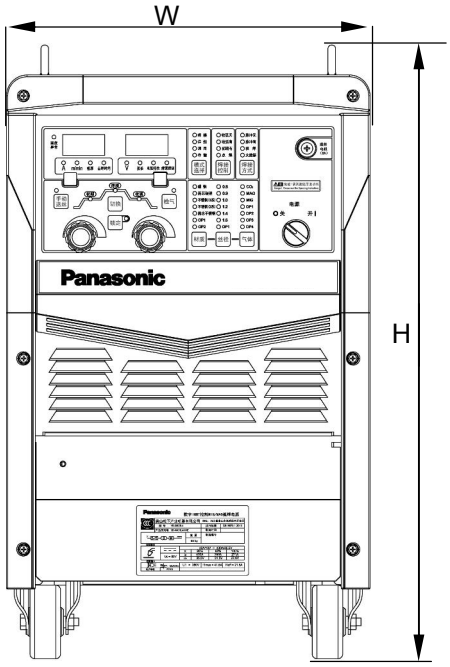

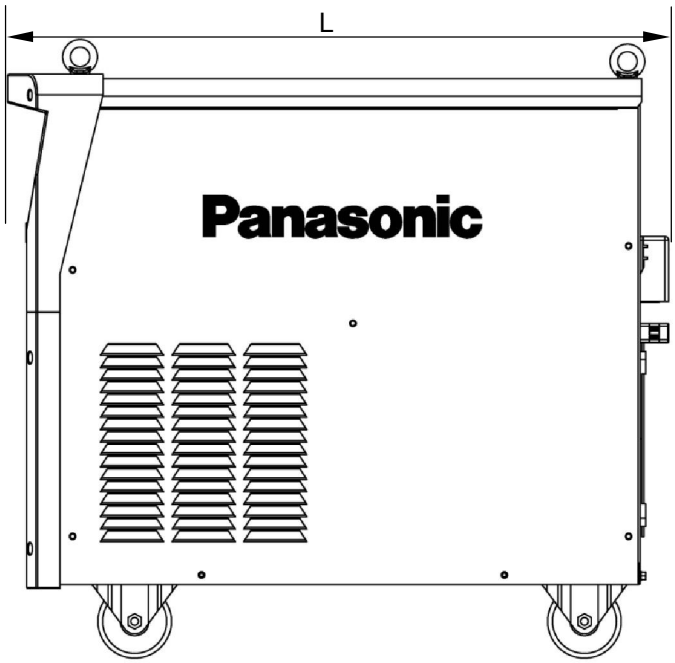

机型	W	H	D
YD-500GL4HGN	380	612	772

（单位：mm）

3. Installation

3.1 Transportation

		When hanging this product for transportation, hang it at two eyebolts.

		● **Do not lift the product on your own.** As this product is heavy, it is dangerous to lift it on your own. Involve plural number of persons with its lifting. ● **Do not leave the product on a slope.** (The product is provided with casters.) ● When pushing this product for transportation, **do not make a sharp turn**, or casters or floor may be damaged.

3.2 Installation site

CAUTION	**This product is designed for indoor use only.** Do not install it in any places subject to rain or water spray.
In case that the product gets wet with rain or water spray: Make sure that persons who well understand this product should check the inside of the product and wipe up water if any. Such water entered inside the product may cause the product to malfunction.	

- Indoors, not subject to direct sunlight or rain, with less moisture and dust.
- Ambient temperature: -10 ℃ to 40 ℃
- Maintain an appropriate distance of 20 cm or more from any wall or other devices.
- Maintain an appropriate distance of 30 cm or more between power sources installed side-by-side. (Install this product in the horizontal position.)
- Places where the welding arc area is not subject to wind. (Protect the area from wind by a partition, etc.)
- Places where the product is not likely to take in metallic foreign substances

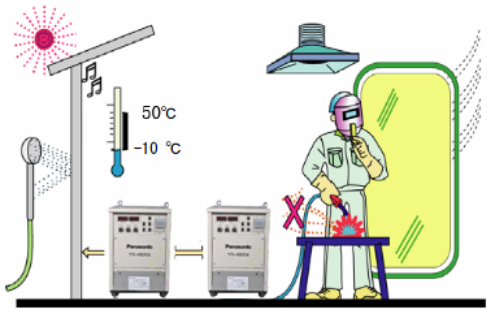

Note

When the product, which is installed on the floor, is too low to operate, customers are required to prepare a table to mount it. (And, in that case, provide such a table with a flange, etc. so that the product does not slip down from the table.)

3.3 Power supply equipment

CAUTION	Observe the following to prevent burnout, destruction of parts and unstable arc.

Input voltage	380 VAC(YD-350GL4and YD-500GL4)
Input protective devices (Breaker, fuse etc.)	Type and capacity to be applied should conform to all national and local codes.
Cable cross section area for input cable and ground wire	Type and size of cables to be applied should conform to all national and local codes.

4. Configuration

4.1 what's needed

- Welding power source: YD-350GM3 (this product)
- Equipment available as peripher (separate sales)

NO.	item	remarks	
①	welding power source	YD-350GL4HGN	YD-500GL4HGN
②	wire feeder	YW-35DG1HLH	YW-50DG1HLH
③	welding gun	YT-35CS4HPF	YT-50CS4HPF
④	gas regulator	YX-25CD1HAL	
⑪	wire feeder trolley	TSMYU050(optional part)	

NO.	item	remarks	
⑤	base metal welding cable	35 mm^2 or higher	70 mm^2 or higher
⑥	grounding cable	6 mm^2 or higher	10 mm^2 or higher
⑦	distribution box	3-phase AC 380 V	
⑧	power source input cable	6 mm^2 or higher	10 mm^2 or higher
⑨	grounding cable	6 mm^2 or higher	10 mm^2 or higher
⑩	shielding gas	Same as the selected gas	

Note: the diagram below shows the connection with the welding power source. Please be sure to use the wire feeder, welding gun, gas regulator of the Product as set equipment. Otherwise the welding performance may be affected or the machine can be even damaged.

Reminder Before using the Product with other standard products, please read the operation manual carefully.

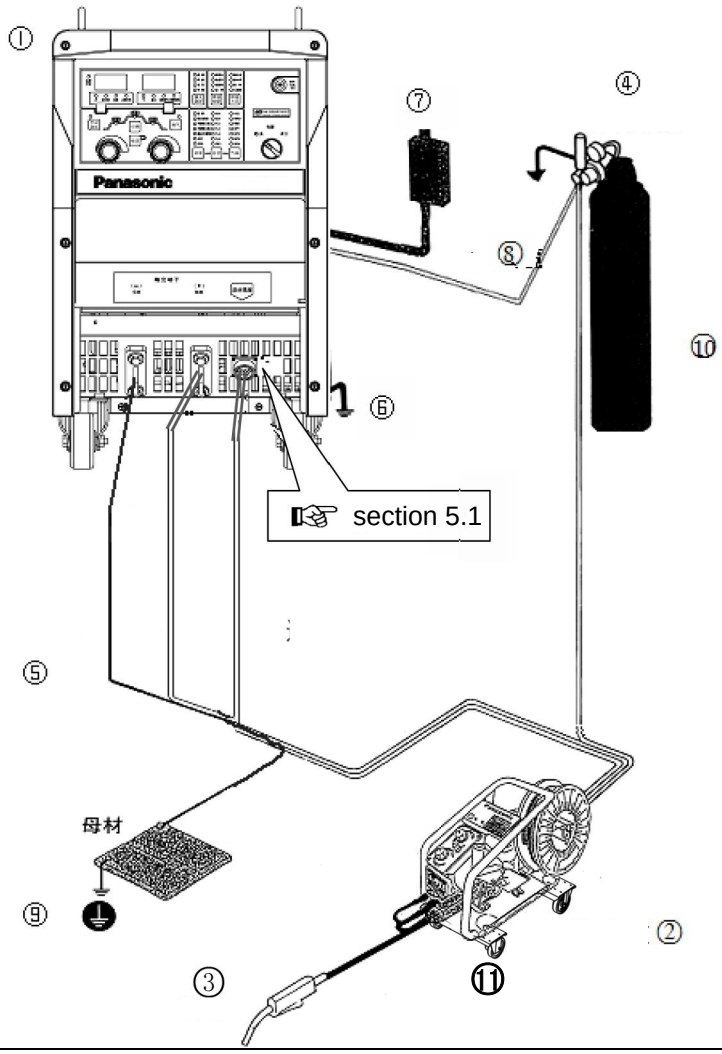

4.2 Connecting cable

CAUTION	Caution against getting the cable wet.

Avoid the connecting cable to get wet.
If there is a chance of getting the cable exposed to rain or water splay, make sure to protect the connection with waterproof cover.
Water seeping into the machine may degrade the insulation between terminals, which may cause an error or damage this product or wire feeder.

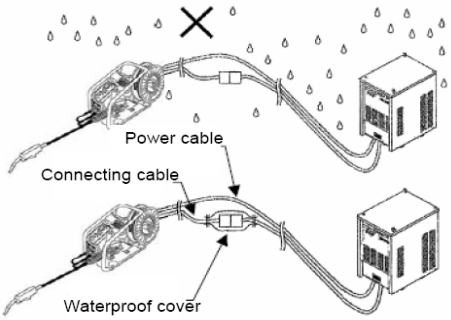

4.2.1 About connecting cable

The connecting cable (separately sold) is useful to expand the working space in welding operation.
(See the table on the right for model numbers.)

Apply the connecting cable between torch output terminal (+) of the product and the torch cable of the wire feeder.

* Depending on work conditions, it may be necessary to extend the base metal cable.

Note

It is not possible to use the connecting cable as a junction cable.

Connecting cable models

Welding power source	Cross section	Length
YD-350GL4HGN	35 mm^2	⩽ 13.2m
YD-500GL4HGN	70 mm^2	⩽ 18.2m

4.2.2 Cautions about using connecting cable

Select a model properly and use connecting cable properly, or adverse impact on welding operation, such as voltage drop, may result. Voltage drop may be resulted from the reactance caused by the conductor resistance or cable routing manner. The longer the cable is or smaller the cross section is, the more likely an adverse impact occurs.
To minimize such adverse impact, pay attention to the following points.

- Relationship among extending length, cross section, allowable current and duty cycle.
  Arrange the base metal cable corresponding to thee applied connecting cable.
- Do not extend the cable unnecessarily. (A shorter cable is preferable)
- Do not use leave the connecting cable slackened. Never coil the connecting cable when welding, or the welding arc may become unstable.
- Connect the base metal voltage detection wire (-) to the base metal voltage detection terminal (-).
- Do not use the connecting cable as a junction cable.

5. Names and functions

5.1 Switches and rear side

CAUTION	**About power switch:** ● When the power switch is turned off automatically, do not turn it on again. (Consult with sales distributor of Panasonic representatives.) ● When activating a power generator, turn off the power switch.

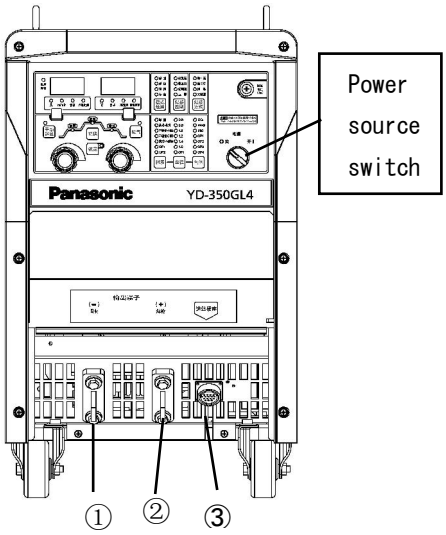

● The connection and disconnection operation of the power source

・Turn the power source switch knob clockwise to connect power source. About one 1 second later, LED display shows software version information.

・The software version is shown for about 4 seconds. Then AC contactor is switched on and cooling fan starts to rotate.

①	**(-) base metal connection** ● Connect the base metal cable to the "(-) base metal terminal" with the attached M10 bolt.
②	**(+) welding gun cable connection** ● Connect the power cable drawn from the wire feeder to the (+) torch terminal with the attached M10 bolt.
③	**control cable socket** (16 cored) ● Please firmly connect the socket with the wire feeder ※1 16 cored cable.

※ 1 for details of wire feeder （☞ Section 4.1), please refer to the operation manual before use.

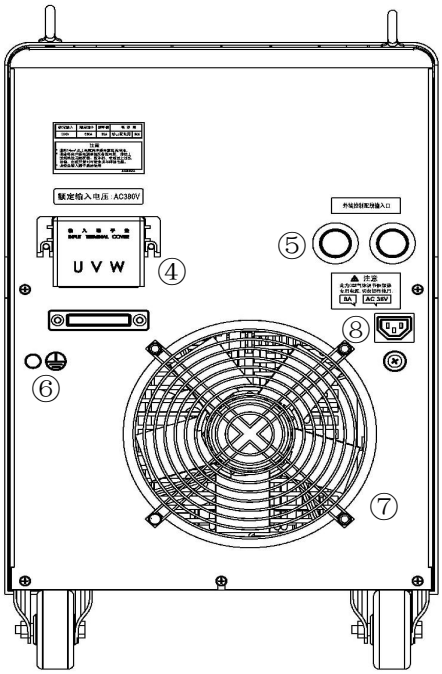

④	**power source input terminal** (It is attached with the protective cover) ●After connecting the power source input cables, please be sure to well install power source input protective cover.
⑤	**external control wire inlet** (external terminal) ●When the wire connection of external terminals, please guide the wires through rubber cover and fasten all wires.
⑥	**grounding terminal** (M8 bolt)● please use reliable grounding method.
⑦	**cooling fan air passage inlet** ● The fan intakes cool air from this inlet. ● Do not leave any obstacles near this inlet ● The operation of the cooling fan. When the power is turned on, the fan rotates. If the no-welding operation lasts more than seven minutes, it automatically stops to save electricity until the welding operation starts for the next time. (After **TS-ON** pressing the switch again, the fan continues to rotate).
⑧	**The gas regulator is equipped with the socket and fuse** ●The output of gas regulator socket is AC100 V. Please do NOT use it on any other purpose. ● fuse capacity is 3A. ● please use the gas regulator provided by the Company. After turning on the power source switch, gas regulator socket outputs voltage immediately.

5.2 Front panel

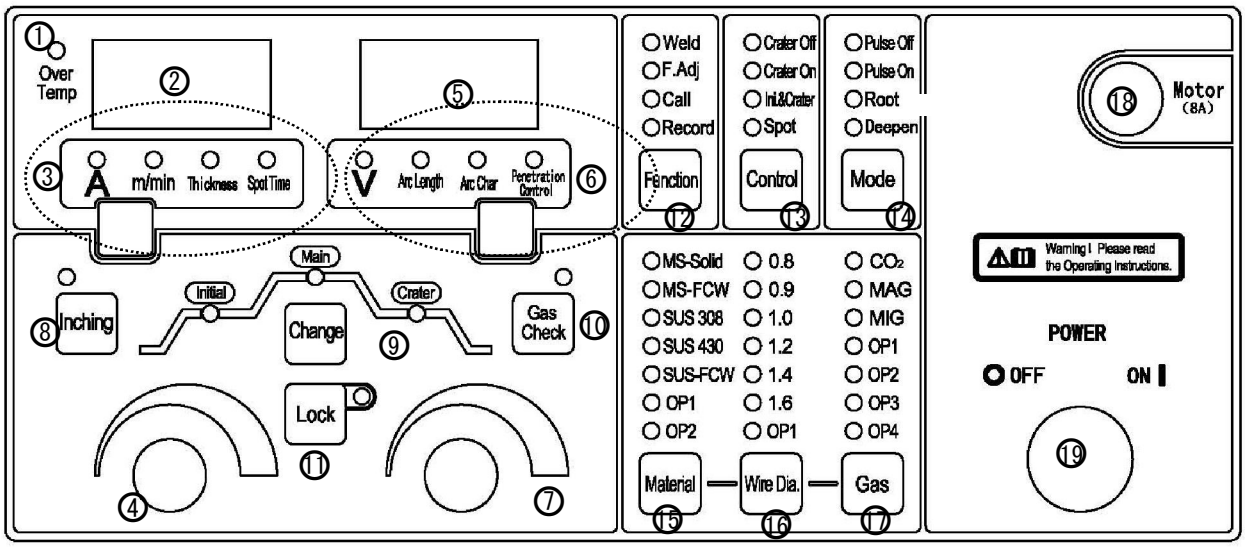

NO.	name	description
①	temperature abnomal indicator	● When abnormal rise in important components temperature occurs, temperature abnomal alarm is sent, this lamp blinks and the welding operation stops. Welding operation cannot be restarted unless this lamp is turned off. (For troubleshooting: ☞ Section 13.1).
②	current display 7-segment LED	When Mode selection key ⑫ is set to“ Weld ” ・On stand-by status,, it shows the current value set in ③ ・During welding, it shows the current value of the actual output.
		● When Mode selection key ⑫ is set to“F. Adj” (☞ Section 5.4) ・It shows fine adjusting setting items PXX(XX stands for 00->29), default display CH-OFF(voltage display LED⑤ shows its specific set value).
		● When Mode selection key ⑫ is set to “ Call ” (☞ Section 5.6) ・The default display CH-OFF. By turning the Jog-dial ⑦, select channel number, LED shows “CH” channel. If welding parameters are available, the channel can be selected, else the corresponding channel can NOT be selected. When the channel stored with data is selected, the channel and parameters are displayed alternately and welding can start.
		● When Mode selection key ⑫ is set to “ Record ” (☞ Section 5.6) ・By turning the Jog-dial ⑦, channel number can be selected. LED shows “CH” setting current and voltage. Flashing means welding parameters are being stored. ・Press selection key ⑫ to return to “ Weld ” from “ Record ” and the corresponding parameters are recorded in the channel being selected.
		● When a self-diagnosable error occurs, (For troubleshooting: ☞ Section 13.1) ・ it shows Err(voltage display LED③ shows alarm signal number).
③	setting “ current ” “ wire feeding speed ” “ plate thickness ” “ spot welding time ” function select	● When “ current ” / “ wire feeding speed ” function is selected, the setting method of the corrosponding selection number is decided by P11 of “F. Adj” function menu. When P11 is 0, it is adjusted by wire feeder potentiometer; when P11 is 1, it can be changed by Jog-dial ④. Note “ plate thickness ” can be displayed only instead of being changed.
		●“ spot welding time ” function is adjusted by Jog-dial ④. Note To change“ spot welding time ”, welding control ⑬ is to be selected as “ spot welding ” function.

NO.	name	description
④	Jog-dial	● When Mode selection key ⑫ is set to " Weld ", (refer to description in ③)・ when key ③ selects different options, please adjust corrosponding set value according different items. ・During welding, " Welding " current can be adjusted. However " initial " and " crater " current can NOT be changed.
		● When Mode selection key ⑫ is set to "F. Adj",(☞ Section 5.4) ・ refer to detailed description.
		● When Mode selection key ⑫ is set to " Call ", ・ It does not function.. (When" Call " is selected, only Jog-dial ⑦, key ⑧, ⑩, ⑫ work.)
		● When Mode selection key ⑫ is set to " Record ", ・ It does not function.. (When " Call " is selected, only Jog-dial ⑦, key ⑧, ⑩, ⑫ work.)
⑤	voltage display 7-segment LED	● When Mode selection key ⑫ is set to " Weld ", ・On stand-by status, 6 data of the item being selected is shown. ・During welding, it shows the voltage value of the actual output.
		● When Mode selection key ⑫ is set to "F. Adj", (☞ Section 5.4) ・It shows specific set values.
		● When Mode selection key ⑫ is set to " Call ",(☞ Section 5.6) ・Use Jog-dial ⑦ to select channel number. LED shows corresponding channel number. If the welding parameters are avilable in the channel, the channel can be selected, else the corresponding channel can NOT be selected. When the channel stored with data is selected, the channel and parameters are displayed alternately and welding can start.
		● When Mode selection key ⑫ is set to " Record ", (☞ Section 5.6) ・By turning the Jog-dial ⑦, channel number can be selected. LED shows "CH" setting current and voltage. The flashing means welding parameters to be stored. ・Press selection key ⑫ to return to " Weld " from " Record " and the corresponding parameters are recorded in the channel being selected.
		● When a self-diagnosable error occurs, (For troubleshooting: ☞ Section 13.1) ・ It shows alarm signal number.
⑥	setting " voltage " " arc length " " arc characteristics " " penetration control " function select	● When "voltage"/ "arc length " function is selected, the setting method of the corrosponding selection number is decided by P11 of "F. Adj" function menu. When P11 is 0, it is adjusted by wire feeder potentiometer; when P11 is 1, it can be changed by Jog-dial ⑦
		● When" arc characteristics " function is selected, the value can be changed by Jog-dial ⑦
		● When"penetration control " function is selected, the value can be changed by Jog-dial ⑦ Note: To change"penetration control ", welding method 14 is to be selected as "Deepen ".

NO.	name	description
⑦	Jog-dial	● When Mode selection key ⑫ is set to“ Weld ”, (please refer to the description in 6) ・ When key 6 selects different options, please adjust corrosponding set value according different items. ・ During welding, the contents in ⑧ can be adjusted. However, “ initial ” and “ crater ” current change not be changed.
		●When Mode selection key ⑫ is set to “F. Adj”, (☞ Section 5.4) ・ Refer to detailed description.
		●When Mode selection key ⑫ is set to “ Call ”, ・ select Call channel number. (Only the channel number being recorded in ⑤ can be shown.)
		●When Mode selection key ⑫ is set to “ Record ”, ・ Record channel number is select.
⑧	manual wire feeding button	●The function is used to feed welding wire into the liner before welding by holding this key. ・ manual wire feeding speed is decided by the welding current.
⑨	switching button	●To switch the setting among“ initial ”, “ Weld ”, “ crater ” current. ・For crater OFF, it can not be switched. Only the setting for “ Weld ” current can be selected.
⑩	gas check button	● It is to check shield gas and adjust flow rate. • Normally, the indicator lamp is off. The lamp is on while checking gas. • To perform the gas check, press this button and then release, then the gas valve of the wire feeder is turned ON and then turned OFF in 20 seconds. Press this button once again to terminate the gas check immediately.
⑪	lock button	● During stand-by, long press button for 1 second to lock the panel. Then all buttons on the panel expect ③⑥⑧⑨⑩ can NOT be operated but the wire feeder potentiometer can be adjusted.
⑫	mode select button	● Weld: welding condition setting for ②～⑦, ⑨ and ⑬～⑰, ⑧⑩ for wire feeding check, gas check for welding, 🔒 for panel lock ・F. Adj: fine adjustment on F. Adj menu (☞ Section 5.4). ・ Call: To call the welding condition being recorded (☞ Section 5.4). ・ Record: To record the present welding conditions (☞ Section 5.4).
⑬	welding control	●For welding control method selection, (☞ Chapter 8) ・ crater OFF: regular welding. ・ crater ON: regular welding ～ crater welding. ・ initial ON: initial welding ～regular welding ～ crater welding. ・ spot welding: The welding lasts certain seconds according to the spot welding time being set. The welding stops automatically when the spot welding time is up.
⑭	welding method	●To select the welding method ・ pulse OFF: No pulse during welding. ・ pulse ON: pulse is turned on during welding. ・ root welding: NO pulse root welding ※1. ・ Deepen: NO pulse deep penetration ※1.
⑮	material	● select the material to be welded ・OP1 and OP2 are reserved for special design.

NO.	name	description
⑯	wire diameter	● select welding wire diameter to be used ・OP1 reserved for special design.
⑰	gas	● welding method select. please prepare gas according to the requirement listed below: ・CO2: CO2 gas 100% ・MAG: Ar gas 80%＋CO2 gas 20% ・MIG: Ar gas 98%＋O2 gas 2% or Ar gas 97.5%＋CO2 gas 2.5% ・OP1, OP2, OP3 and OP4 are reserved for special design.
⑱	fuse (8A) wire feeding motor	●protection on the wire feeding motor Note: be sure to turn off the power source switch before replacing the fuse.
⑲	power source switch	● switch the power source ON and OFF

※1 【 Deepen 】 function is an optional software package. The test welding can last for 3 hours after setting P menu (☞ Section 5.4). If you desire to continue this function, please contact the Distributor to activate the function.

Note 1. The welding material, welding wire diameter and welding gas being set in (15)～(17)should be in line with the actual operational conditions.

2． If there is no welding data in welding material, welding wire diameter and welding gas, it shows “--- ---”, as shown in the picture below.

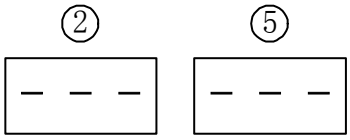

6. Connection

Important	● The installation shall be done by qualified installation personnel and should conform to all national and local codes. ● Type and capacity of protection devices, such as breaker and fuse, to be applied should conform to all national and local codes. ● Type and size of cables to be applied should conform to all national and local codes.

WARNING	**Touching current carrying parts may cause a fatal accident like an electric shock, burn injury and so on.** To prevent physical accidents like an electric shock, burn injury and so on, make sure to observe the followings.
	● Make sure to turn off the switches of this product and the distribution box before starting connections. ● Do not perform any connection work with wet hands. ● Make sure to insulate all bare current-carrying parts like joints and so on by tape, etc. ● Do not apply undue force to the cables and wires. ● Avoid contact with the welding arc part at wiring. ● For safety reasons, provide base material with grounding work. Wiring and grounding work should be done by qualified electricians.

CAUTION	Observe the followings to prevent a fire caused by overheat of cables. ● Use cables with specified size or larger. ● Fasten all cable connections securely.

6.1 Output side connection

Open the terminal cover at the bottom of the front panel to access the terminals and connector.
(Loosen the bolt to open the cover.)

Note

After completion of connecting base metal cable and torch cable, insulate the cable connections with insulation tape.

6.1.1 Connecting cable from base metal

Connect cable from the base metal to the base metal terminal (-) with the attached M8 bolt.

After connection, insulate the cable connections with insulation tape.

● About base metal cable (Customer preparation)

- Use a cable of 35 mm^2 (70 mm^2 for 500GL4) or more for welding or a specified tough rubber sheath cable (excluding vyniletype)
- Make sure to use one whose cross section and length conform to the applied connecting cable.
  (See section “About connecting cable”.)
- Make sure to attach the proper clamp terminal.

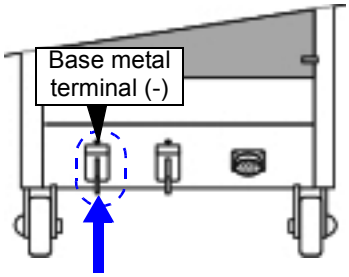

Connect base metal cable

6.1.2 Connecting torch cable

Connect torch cable from the wire feeder to the torch terminal (+) with the attached M10 bolt.

After connection, insulate the cable connections with insulation tape.

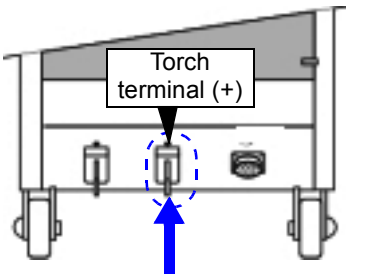

Connect torch cable

6.1.3 Connecting feeder cable

Put in the plug of the feeder cable from the wire feeder to the feeder connector.

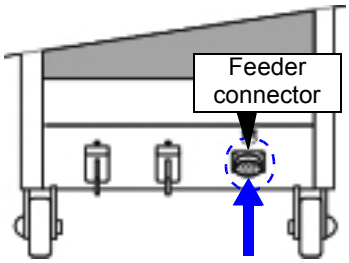

Put in the plug of the feeder cable

6.14 Connecting grounding wire

CAUTION	Water supply pipes, building iron frames, etc. do not serve as sufficient ground. Do not connect any grounding wire to them.

1	Ground terminal	M8 bolt
2	Grounding wire	10 mm^2 or more. Customer preparation
3	Ground	-

* Grounding work should be performed by qualified electricians.

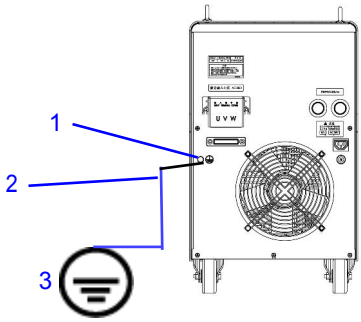

6.15 Connecting input power cable

WARNING	• **Install one distribution box each for this product.** • **Make sure to turn off the power distribution box first.**

(1) Turn off power at the distribution box.

(2) Remove the terminal cover

(3) Connect one end of input power cable to the input terminal.(Phase order does not matter.)

Note

Do not use wrench

Tightening torque:2.45 **Nm**- 3.40 **Nm**

(4) Reinstall the terminal cover.

(5) Connect the other end of the input power cable to the load-side terminal of the switch of the distribution box.

(For reference)

Input power cable size: 10 mm^2 or more

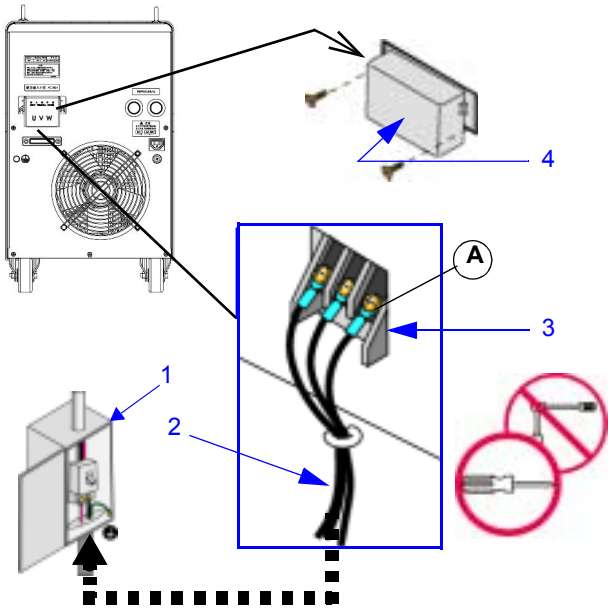

1	Distribution box	Customer preparation
2	Input power cable	Customer preparation
3	Input terminal board	-
4	Terminal cover	-

6.2 Connecting jig(s)

When touching a printed circuit board, observe the following item to prevent electrostatic destruction of the printed circuit board.
Before starting an operation, for example, touch any metal part of the case with your hand to discharge static electricity.

There are two types of jig terminals (Jig terminals 1 and 2)

(1) Jig terminal 1
To send out a command for the emergency stop and temporary stopping from a jig or another device.
To send out the current detection signal to a jig or another device.
Location: On the chassis inside the product.

(2) Jig terminal 2
To install an external voltmeter or ammeter.
Location: On the chassis inside the product.

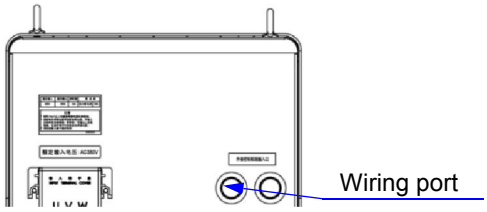

Top view (without top panel)

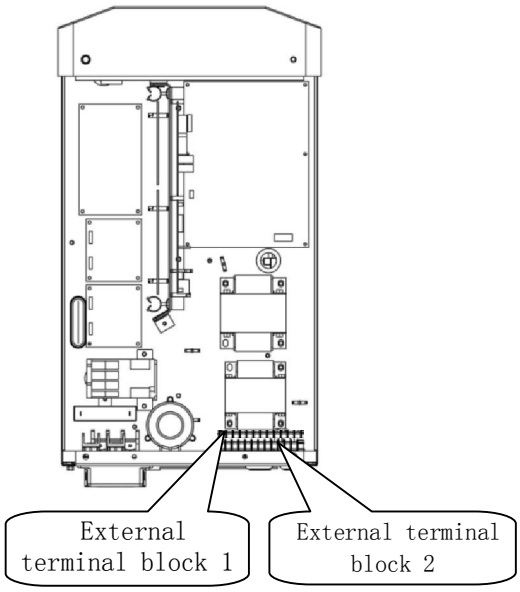

Note

- Keep the communication cables away from the welding arc area, the welding torch, the base-material-side cable, etc. to prevent troubles caused by incorporation of the high frequency wave. And keep the wiring length within 10m.
- Lead wires from the wiring port. (Make a cut in the grommet wall to insert wires.)

As to signal wires from another device:
make sure to tie the lead-in wires in a bundle with a binding band (15 cm) over the boot of the grommet to prevent dust to get in 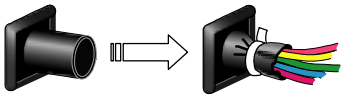

6.2.1 Layout of jig terminals

* Connect the start signal of this product to the torch switch receptacle of the wire feeder.

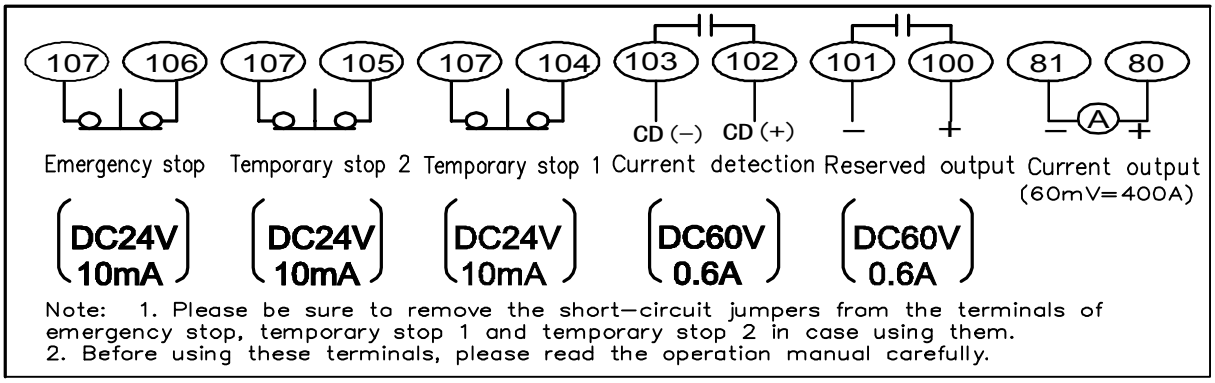

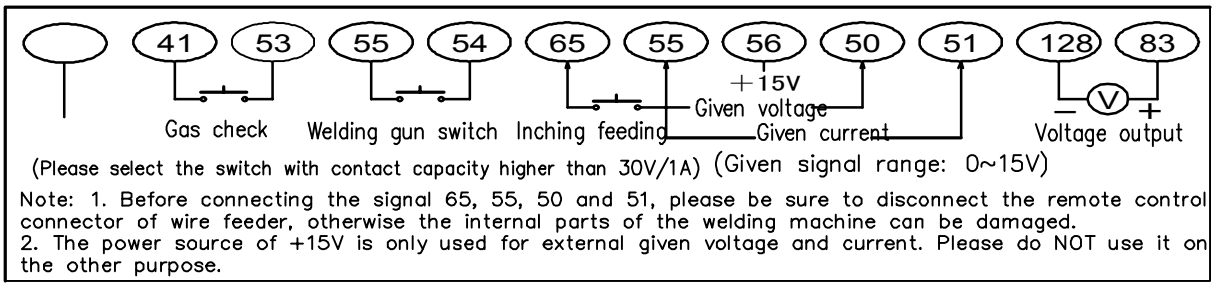

7. Preparation and termination processings

7.1 Preparation

7.1.1 Use of protective equipment

WARNING	To protect you and other people from gases, fumes and lack of oxygen that may be generated during the welding operation, make sure to prepare ventilation facilities and use protective equipment, etc.
	● Welding operations in narrow spaces may cause asphyxia due to lack of oxygen. ● Prepare ventilation facilities to prevent the inhalation of gases and fumes generated during the welding operation. Otherwise, wear a respirator.

CAUTION	To protect you and other people from arc light, flying spatters, slag, and arc noises generated by welding, use protective equipment.
	● Wear leather gloves and safety shoes to protect the exposed parts of your eyes and skin. ● Prepare light-shielding glasses or a welding face-shield with a light-shielding filter plate appropriate to the applied welding current.

7.1.2 Pre-operation check

- Check if all connections are correct and complete.
- Check if settings of the switches on the P.C. Board are correct
- Check if wire is set to the wire feeder.

7.1.3 Turning on power

(1) Turn of the power to the distribution box.

(2) Turn on the POWER switch of this product.

7.2 Termination processing (steps after welding operation)

7.2.1 Shutting off gas

(1) Close the main valve of the gas bottle.

(2) Perform the “gas purge” to take the residual pressure out of the pipe.

7.2.2 Shutting off power

Important	To allow the inside of this product to cool down, turn the power off at least 5 minutes after the completion of welding operations.

(1) Turn off “POWER” switch.

(2) Turn off the power to the distribution box.

8. Settings

8.1 FUNCTION settings

8.1.1 “F. ADJ”

The following table shows the pages and parameters for fine adjustment/settings using the “F. ADJ”.

(1)Use the Mode selection key ⑫ to select F. Adj. (During welding, it can NOT be selected.)
It shows P00 in ② and 00 in ⑤.

(2)In ④, select the item (P00～P29) to be changed.
It shows item in ② and set value in ⑤.
Note please don’t turn ⑦ Jog-dial arbitrarily.
(The set value in ⑤ can change.)

(3)When you want to change the set value of the selected item, turn ⑦, The set value is shown in ⑤.

(4)After operation, select the other mode than “F. Adj”
According to (3) operation, you can decide the set value
Note the circled digits are in correspondence with that of the parts on the right drawing. On F. Adj status, welding is not enabled but gas check function works.

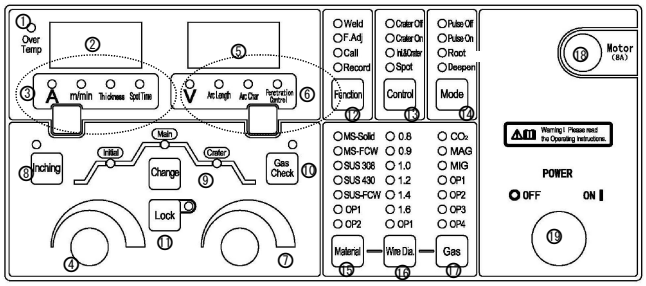

【Basic Control】

NO.	Menu contents	Set range	Increment	Default	Note
P00	SLOW DOWN※1	-50～50	1	0	Fine adjustment of slowdown speed. Increase the set value to increase the slow-down speed.
P04	PRE FLOW TIME	0 s～5 s	0.1s	0.1s	It specifies time to feed wire after starting gas supply by turning on the torch switch.
P05	AFTER FLOW TIME	0 s～5 s	0.1s	0.1s	It specifies time to stop gas supply after stop-ping the arc by turning off the torch switch.
P10	UNITARY· respectively	0 or 1	1	1	1: Welding voltage unification; 0: The welding voltage is respectively.
P11	External remote control	0 or 1	1	0	1: The power supply preset current and preset voltage are adjusted by the operation panel encoder; 0: The power supply preset current and preset voltage are adjusted by the wire feeder remote control.
P12	Loop resistance Compute※2	0 or 1	1	0	When set to 1, the mode selection key ⑫ is selected for soldering. Make sure the contact tip is in close contact with the base material. Press the torch switch. The digital tube ⑤ shows the corresponding resistance value (unit: 0.0001Ω).

NO.	Menu contents	Set range	Increment	Default	Note
P20	FTT Voltage	-50～50	1	0	Fine adjustment of output voltage during burn-back time. (The setting reflects on the wire burning at arc end.) Increase the set value for stronger wire burning.
P21	BURNBACK TIME 1※3	-50～50	1	0	【Pulse-OFF】The time of the main welding voltage to the back burning voltage, Under normal circumstances, users do not need to adjust. 【Pulse -ON】Peak pulse current time.
P22	BURNBACK TIME 2※3	-50～50	1	0	【Pulse-OFF】Burning back the role of voltage time, the user to adjust the P22 【Pulse-ON】Number of burn back pulse.

※1 P00（SLOW DOWN）

To obtain solid arc start, set the wire feed speed immediately after turning on the torch switch slower than that in normal welding operation.

※2 P12（ Loop resistance Compute）

When using or replacing a cable for the first time, you need to calculate the loop resistance

※3 P21 和 P22（BURNBACK TIME 1 and BURNBACK TIME 2）

It is the duration of time (short period of time) to keep supplying output voltage after stopping the arc by turning off the torch switch. (It is to burn up excess wire fed out of the end of the torch tip due to inertia of the wire feed motor.

【Pulse-OFF】

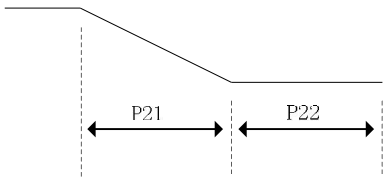

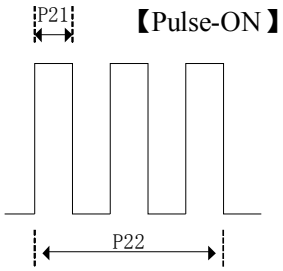

【 Special purpose machine and Robot 】

NO.	Menu contents	Set range	Increment	Default	Note
P09	Wire adhesion detection ON/OFF	0 or 1	1	0	When the Product works with special purpose machine or robot, the setting can be used. When welding finishes or starts, the adhesion between welding wire and base metal can be detected automatically.
P23	Given current and voltage setting	0、1 or 2	1	0	Input signal voltage setting corresponding to the maximum output (when using a signal other than the remote controller): 0: 15V input 1: 12V input 2: 10V input
P26	Robot connection mode※4	0 or 1	1	0	1: Compatible mode ("external terminal board 1" interface multiplexing); 0: Normal mode.

※4 P26（Robot connection mode）:

When P26 is set to [1], it indicates that it is compatible with other social robots (only analog interfaces can be used with other robots).

(Refer to Section 10.2 for details). The spare output port is used as the sticky wire detection output port. Temporary stop 1 is used as the sticky wire detection signal given port and temporary stop 2 is used as the spinning control port. When the temporary stop 1 open between the terminals that start viscose detection, the terminal is connected between the end of that viscose detection; when the temporary stop between the two terminals that open for spinning, the terminal is connected between the wire.

【Arc control】

NO.	Menu contents	Set range	Increment	Default	Note
P01	Arc ignition energy compensation	-50～50	1	0	【Pulse -OFF】Fine adjustment of peak current of arc. 【Pulse -ON】 Fine adjustment of the peak time of arc. It increases when the direction is adjusted positive value.
P02	Arc ignition voltage compensation	-50～50	1	0	Fine adjustment of the arc voltage value. The peak current of the arc is increased when the direction is adjusted positive value.
P03	Arc ignition time compensation	-50～50	1	0	The role of micro-adjustment of the arc voltage. Positive value direction of the arc voltage adjustment time longer.

【Pulse control】

NO.	Menu contents	Set range	Increment	Default	Note
P15	Dual-pulse frequency※5	0 Hz～10 Hz	0.1Hz	0 Hz	NOT 0：dual-pulse mode is enabled
P16	Low pulse duty ratio	10～90	1	50	the second pulse output duty ratio.
P17	Low pulse current	30 A～（350/500）A	1A	120A	Low pulse current set point.
P18	low pulse voltage	-9 V～9 V	0.1V	0V	Voltage compensation for the unified voltage.
P19	Low pulse Delay time	0 s～9.9s	0.1 s	0 s	HOT VOLTAGE after the end of the delay time to start the double pulse.

※5Double pulse: In the original pulse (high pulse part), based on the increase in the low pulse part.c

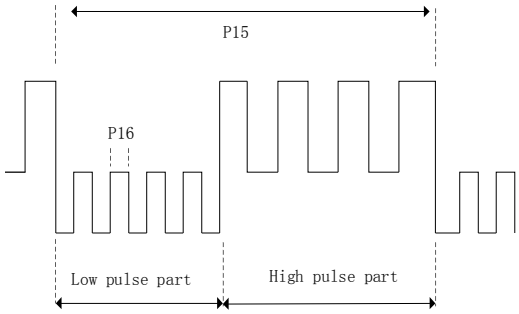

【INIT·CRATER】

NO.	Menu contents	Set range	Increment	Default	Note
P06	CRATER REPEAT	0 or 1	1	0	1: enabled, 0: disabled. （☞ Chapter 8）
P07	CRATER REPEAT TIME	0 s～5 s	1 s	2 s	The setting of the value of the time of closing arc repeating.
P14	Crater linkage percentage	0～200	1	0	NOT 0: The arc current is [Welding current] * [Setting value] %; 0: The closing arc current is the setting of [Arc current value]. Note: After the linkage percentage is set, the arc current does not exceed the maximum welding current limit [350 A / 500 A]
P13	INIT linkage percentage	0～200	1	0	Not0: Initial current is [Welding current] * [Setting value] %; 0: Initial current is the set [Initial current value]. Note: After the linkage percentage is set, the initial current will not exceed the maximum value of the welding current [350 A / 500 A]
P27	INIT·CRATER Switch	0 or 1	1	0	1：AUTO　0：Manual

【Others】

NO.	Menu contents	Set range	Increment	Default	Note
P24	Arc shape	-99～99	1	0	The higher value you set, the more concentrated arc you get；The lower, the less concentrated arc.
P25	Welding display mode	0 or 1	1	0	0 stands for current and voltage display ;1 stands for energy display [P=U*I]
P28					reserved for
P29	Deepen test welding function enabled※6	0 or 1	1	0	1: enabled, 0: disabled. Test welding can last for 3 hours Deepen function

※6 P29 (Deepen Trial function enabled)

When the accumulated welding time reaches 3 hours after the timer for trial starts, this function is disabled. If you desire to continue, please contact with distributor to activated this function.

8.1.2 “CALL” and “RECORD”

Reminder

●“Call” is a function to use stored welding conditions and “Record” is to store the well-tuned welding conditions.

Record/Call operation is applicable to the set values of current ・ voltage, spot welding time, arc characteristics, penetration control, welding control, pulse ON/OFF, material, wire diameter, gas and F. Adj.

■“Record” operation

Reminder During Record operation, welding can’t start. (Gas check works.).

No.	Operation	7-segment LED
1	●Select Record in ⑫ (as shown in the picture on the right)	CH OFF
2	●Select the channel (CH1-CH100) to be used in ⑦. (It alternately shows “CH” and current set value in ②, channel and voltage set value in ⑤)	150 19.2 CH 1
3	●After operation finishes, select ⑫ and return to “welding” mode. Till now data recording finishes.	

Note During Call operation,⑬⑭⑮⑯⑰ operation does not function.

■“Call ” operation

Reminder During the selection of Call, welding condition can NOT be changed (gas check and manual wire feeding function work.)

No.	Operation	7-segment LED
1	●Select Call in ⑫ (as shown in the picture on the right)	CH OFF
2	●Select channel (CH1-CH100) to be called in ⑦ (It alternately shows “CH” and current set value in ②, channel and voltage set value in ⑤)	150 19.2 CH 1
3	●At present, (welding condition is already being called) welding can start.	
4	●After operation finishes, select ⑫ and return to “ welding ” mode	

8.2 CHANGE settings

● Four types of welding operation are available by setting “CHANGE button on the front panel; “NO CRATER”, “CRATER”, “INI.&CRATER” and “ARC SPOT”.

Note

For detail operation procedures of each welding operation, please refer to section “Operation”.

1) Set items

Set item	Description	Suitable application	Note
NO CRATER	An welding operation using “main welding” only. (No initial welding or crater.)	Tack welding, Repetition of short welding, Thin plate welding.	
CRATER	An welding operation using “crater”* after “main welding”. (No initial welding.)	Medium thick plate welding	***Crater** is a built-up welding that can fill the crater part at the end of a welding section.
INI. &CRATER	An welding operation using “initial welding”** before “main welding” and “crater” after “main welding”.		** **Initial welding** is a welding useful for stable arc start.
ARC SPOT”	An welding operation that turns off welding arc automatically after a preset arc spot time (Tspt) passed. (No initial welding or crater.)	Lap welding of thin (about 1.0 mm) plate.	It is necessary to use the arc spot nozzle 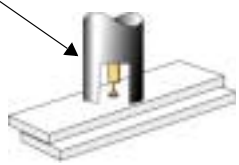

8.3 The welding machine factory defaults reset

● If 7-segment LED cannot display correctly after turning ON the power source, the damage of internal data may happen. Please follow the steps here to restore machine to factory settings.

● The operation sequence

1. Disconnect power source ；
2. After connecting the power source, at the moment when the software version is shown, hold 【 lock 】 and 【 welding control 】 button at the same time for 2 seconds. After welding machine finishes the display of the software version, the display shown on the below picture happens. Thus the default setting is done successfully. Please disconnect power source ；

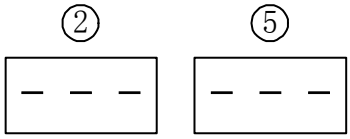

Note Only when the display shown on the above picture on the welding machine, the power source can be switched off, otherwise wrong operation would lead to the failure of the operation. And the second step should be done again.

3. After turning the power source again, welding machine restores to factory settings；
4. Because the recorded data is reset to factory settings, please set according to your requirement.

Note: During welding, there are certain errors of current and voltage between the value shown on LED and preset value. It’s not a machine problem. During actual welding, the factors such as gas, wire diameter, welding technique and extension length etc. can generate the above-mentioned errors.

8.4 Welding wire inching

CAUTION	Wire extends out from the end of the welding torch and may stick into the eye, face or body, which can cause injury.
	Do not perform wire inching operation or pull the torch switch with your eyes, face or body close to the end of the welding torch. Wire may stick into your eye, face or body.

CAUTION	Applying high-speed wire inching with the torch cable bent may cause the wire to run through the resin liner and the cable.
In case of using a torch cable with the resin liner, straighten the torch cable and reduce the feed amount (current) to a half or less before performing the wire inching. Please replace any damaged liner or cable with a new one as use of them may cause gas leak or insulation deterioration.	

Attention	In case of using a welding wire with a small diameter (0.8 mm^2 or 0.9 mm^2)
Use of a wire in small diameter may cause unstable wire feeding. In case of using such wires, please feed the wire at low speed or contact Panasonic representatives.	

Press the “INCHING” (8) button on the operation panel to feed the wire manually. The wire is fed forward while this button is pressed. And the lamp is on while feeding the wire.

* Inching is available when the welder is in standby state.
* Current set value for the main welding is used to determine the wire inching speed.
* If this button is pressed when the “F. ADJ” or “RECORD” (“FUNCTION” (12)”) is selected, the “no” “Arc” are displayed on (2) and (5) respectively to indicate that it is not possible to feed wire.

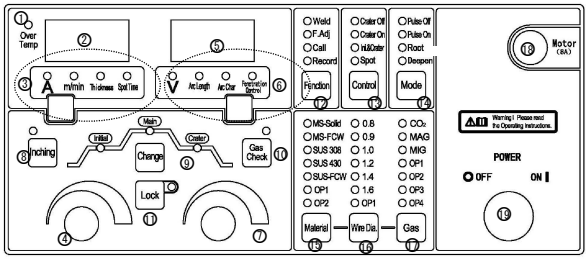

8.4 Checking shield gas

CAUTION	Prior to checking, read the operating instructions of the applied gas regulator. Make sure to read and understand safety precautions.

Check the shield gas if necessary.

(1) Check and make sure that the Flow adjustment knob is place in the “SHUT” position.

(2) Turn on the gas cylinder main valve.

(3) Press the “GAS CHECK” (14) button.

(4) Turn the flow adjustment knob gradually in the “open” direction until the flow rate becomes appropriate.

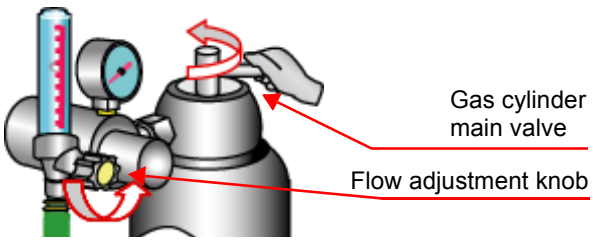

9. Operation

Depending on the CHANGE button settings and the use of “Crater repeat”, torch operation varies as follows.

Note

After turning on the torch switch, if the voltage detect is not executed, the welder goes in an error state (Err6: Arc start error) and turns off the output automatically.

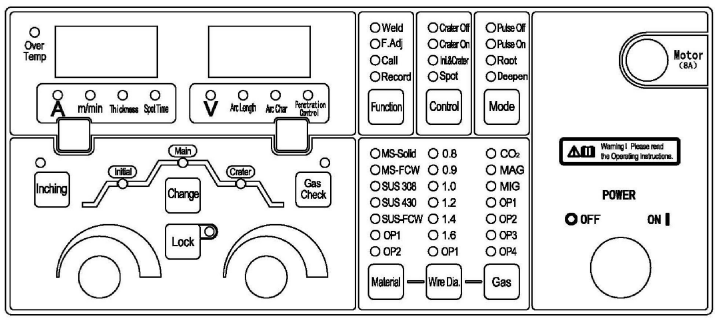

9.1 Welding current calibration

Welding current is tested and calibrated with following welding wire extension. it may need readjustment with moved welding parameters such as torch angle, wire type , shieling gas and other welding conditions.

Welding current		50A	100A	150A	200A	250A	300A	350A
Extended wire length (Tip-Base metal distance)	0.9 ㎜ wire 0.8 ㎜ wire	12	12	12	15	18	–	–
	1.2 ㎜ wire 1.0 ㎜ wire	15	15	15	18	18	22	25

9.2 “NO CRATER”

Operation: Turn the torch switch on and off to start and stop welding arc respectively.

① Torch: ON → **② Torch: OFF**

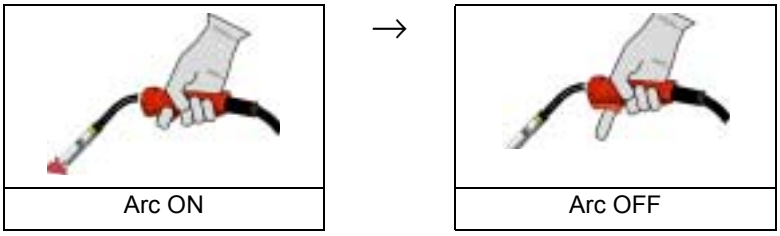

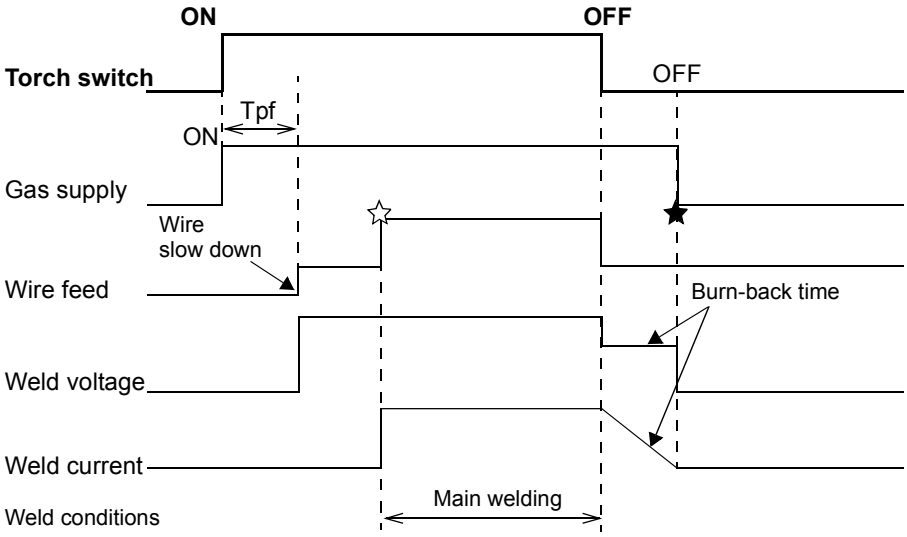

Tpf: Gas pre-flow time
☆ :Arc start
★ :Arc end

9.3 “CRATER”

Operation: Turn the torch switch on and off twice.

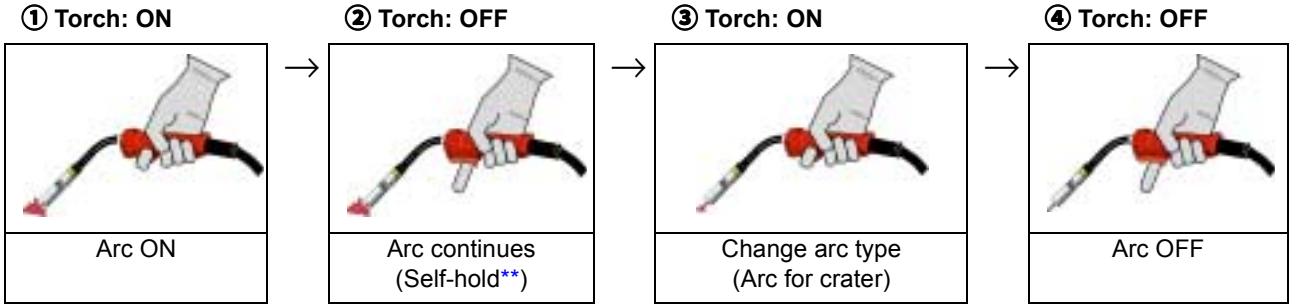

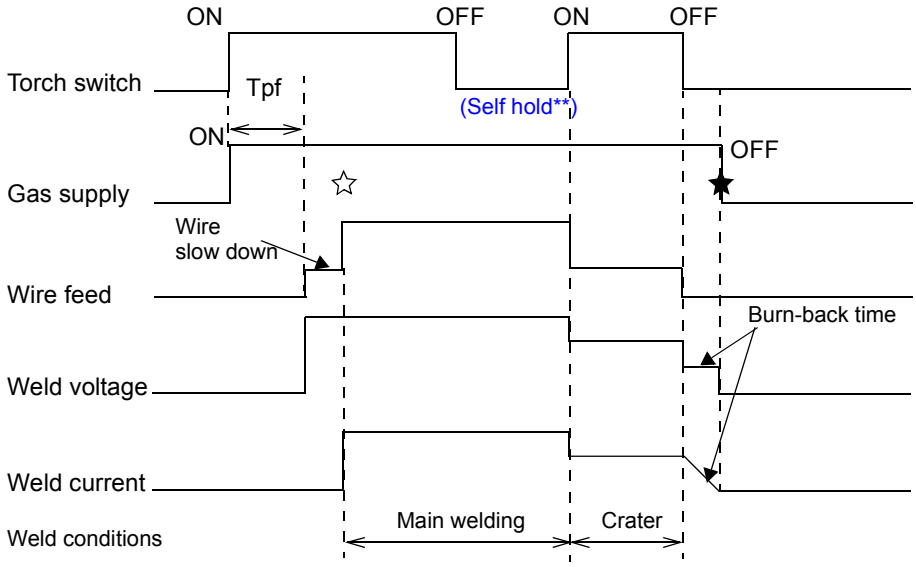

Tpf: Gas pre-flow time
☆ :Arc start
★ :Arc end

9.4 “INI. &CRATER”

Operation: Turn the torch switch on and off twice.
(Turn the torch switch ON to start initial welding and turn it OFF to switch to main welding. Then turn it ON again to start crater operation.)

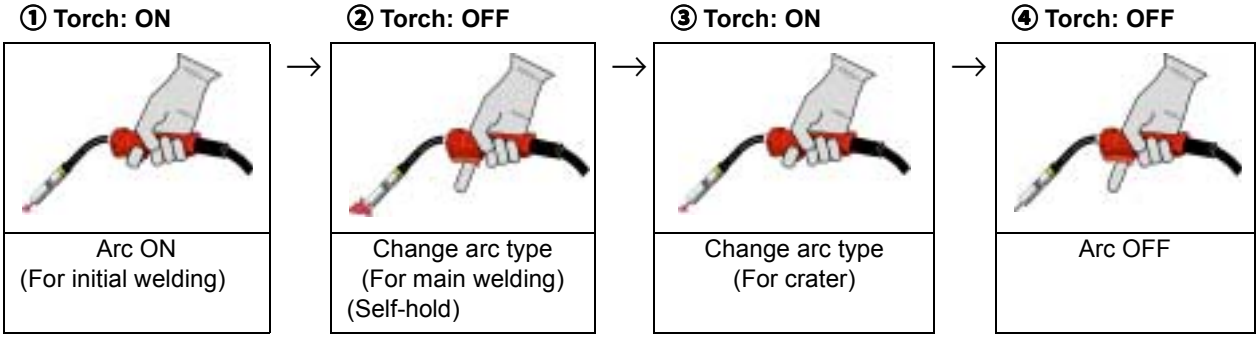

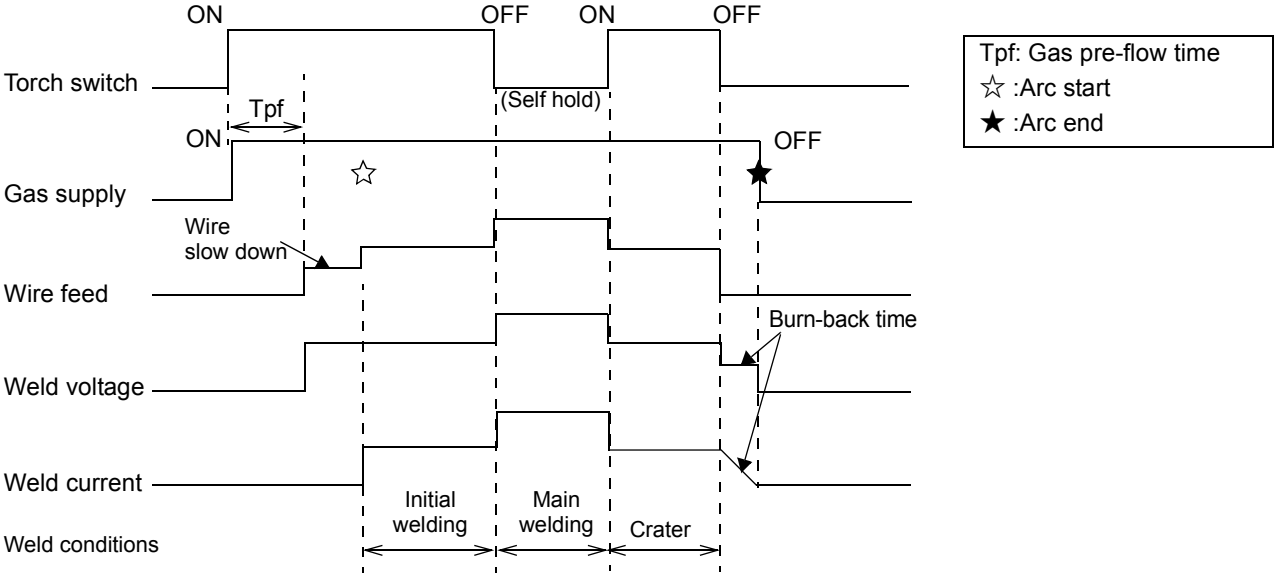

9.5 “Crater repeat” operation

To repeat crater operation turn ON the torch switch within a preset time (Trep)* after turning off the previous crater operation. (In this manner, it is possible to repeat the crater operation again and again.)
*: **Trep**: About 2 seconds

Note

If the torch switch is not turned on within the preset time, the function is cancelled.

① Torch: ON → **② Torch: OFF** → **③ Torch: ON** → **④ Torch: OFF** →

Arc ON

Arc continues (Self-hold)

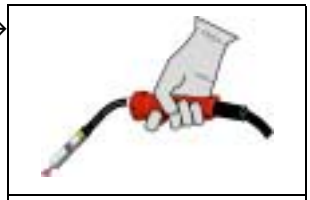

Change arc type (Arc for crater)

Arc OFF

→ Repeat #3 and #4 to repeat crater welding.

(Crater repeat)

Torch: ON within Trep time → **Torch: OFF**

Change arc type (Arc for crater)

Arc OFF

- **To stop welding, raise the torch until arc is cut.**

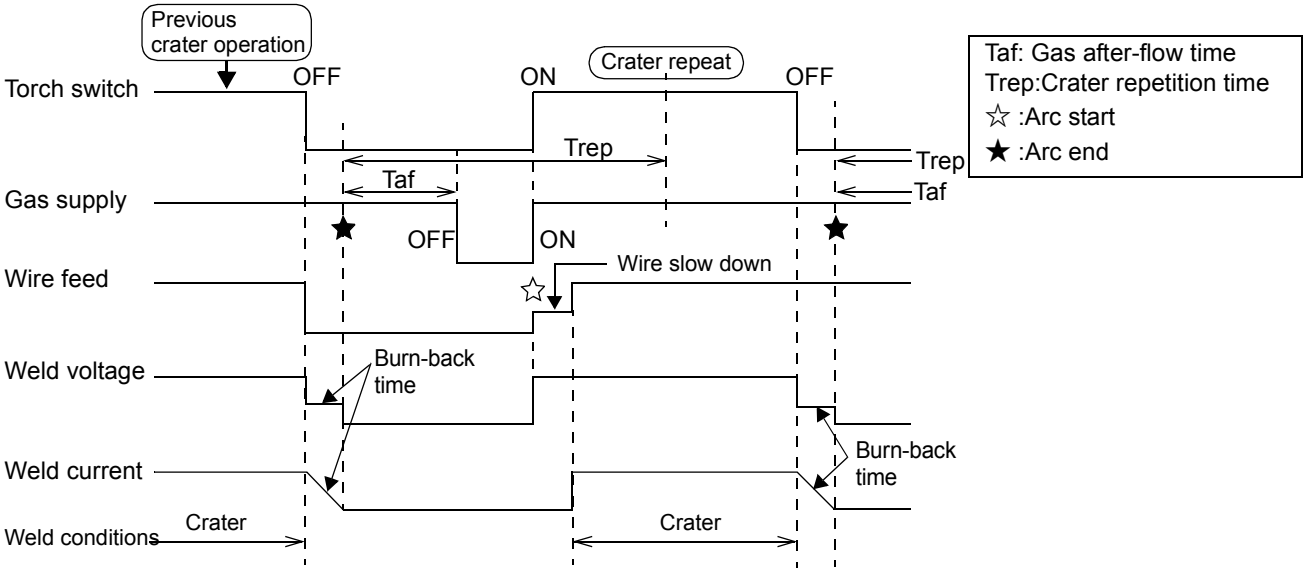

9.6 “ARC SPOT”

Press (turn on) and hold down the torch switch until the welding arc is turned off automatically.

Note

If the torch switch is released while generating the welding arc (before Tspt ends), the welding arc is turned off immediately.

① Torch: ON and keep it down → **→<End of Tspt>** → **② Torch: OFF**

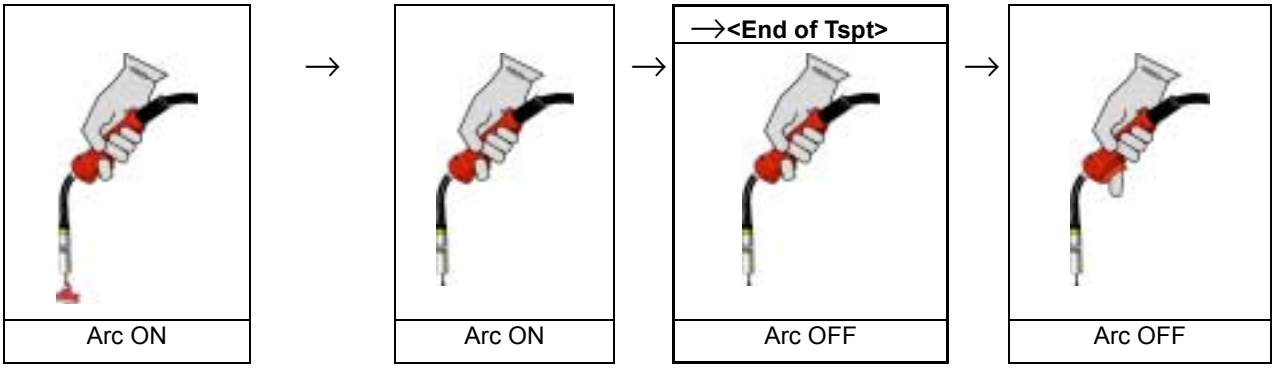

●Example of wrong operation:

① Torch: ON and keep it down → **② Torch: OFF** **→<End of Tspt>**

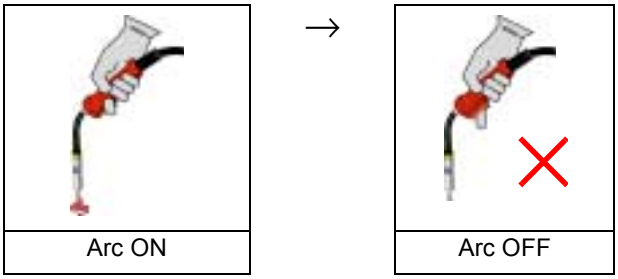

Note

Releasing the torch switch before the end of the Tspt (arc spot time) turns off the welding arc immediately without completing preset welding operation.

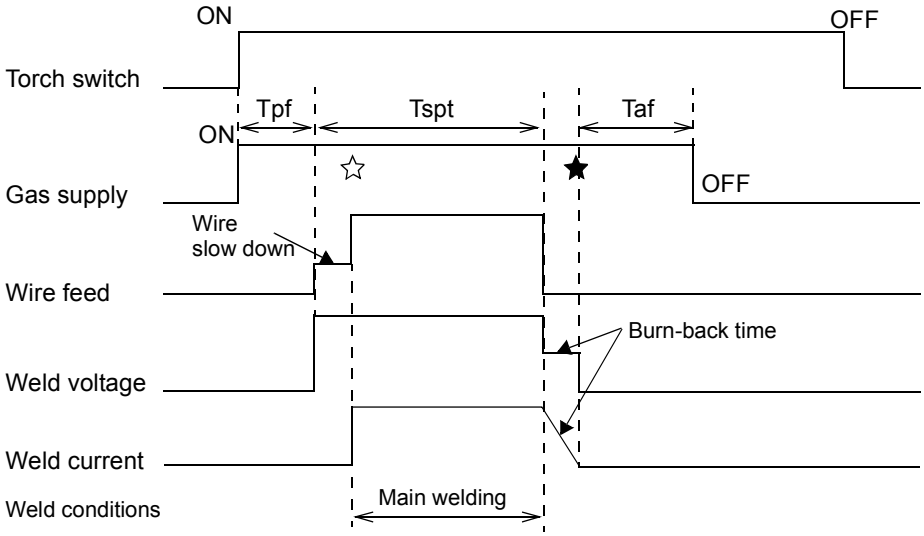

Tpf: Gas pre-flow time
Taf: Gas after-flow time
Tspt:Arc spot time
☆ :Arc start
★ :Arc end

10. Maintenance and inspection

WARNING	**Touching any current-carrying parts may cause a fatal electric shock or burn injury** To prevent a fatal accident, such as an electric shock, burn injury, etc., make sure to observe the followings.
	Make sure to turn off the power switch and the switch of the distribution box before making a daily check. (However, any external check made without touching current-carrying parts or their surrounding area is excluded.)

10.1 Daily check

- Perform the daily check without fail. It is important to make the most of the performance of this product and to secure the safety of daily operations.
- Check the items indicated in the following table, and conduct the cleaning and replacement of parts when necessary.
- For replacement of parts, make sure to use our genuine parts for Panasonic welding machine to keep its performance and functions

10.1.1 Welding machine (This product)

Check item		Check point	Remarks
Front panel Ntote	Devices on the front panel	Breakage or loose attachment.	If there is any defect, an inside check, additional fastening, parts replacement, etc. are required.
	Terminal cover at the bottom	If it is fixed with screws.	
Rear panel	Input power terminal cover	• If the cover is attached correctly. • Breakage or loose attachment. • Check if any foreign matter is attached to the cooling air intake vent	
Top panel Bottom panel Side panel	Eyebolts and other bolts	Breakage or loose attachment.	If there is any defect, additional fastening, parts replacement, etc. are required.
	Casters	Breakage or loose attachment.	
	Panels	Loose attachment.	
Overall	Appearance	Check if there is any trace of heat generation, such as discoloration.	If there is any unusual events, an inside check is required.
	After turning ON the power switch, check the followings • If the cooling fan makes unusual rotation noise. • If the cooling fan generates cooling wind all right. • If there is any unusual vibrations, beats or odor.		

Note: The parts behind the terminal cover at the bottom are periodical check items.

10.1.2 Cables

Check item	Check point	Remarks
Grounding wires*	If each grounding wire is connected all right and fastened securely.	To prevent a physical accident caused by electric leakage, make sure to check it.
Other cables	• If cable coating is worn or damaged. • If any current-carrying parts is exposed. • If any heavy items not placed on the cable. • If the connection of the base metal cable is fastened securely.	To secure the physical safety and stable arc, check those cables in an appropriate manner according to the conditions of shop floors. Daily check: Quick and rough check Period check: Thorough check

* Check grounding wires for perhipheral equipment, such as base metal and water cooling unit as well as for this product.

10.1.3 Other devices

Check item	Check point	Remarks
Welding torch, Wire feeder, Remote controller, Gas regulator	Follow the operating instructions of the individual devices.	
Gas hose	If joint is fastened securely. In case a hose band is used,if there is any loose attachment.	If there is any defect, additional fastening, hose replacement, etc. are required.
	If hoses are worn or damaged.	

10.2 Periodic check

WARNING	• To secure physical safety, make sure that a qualified person or a person who is familiar with the welding machine takes care of a regular check. • As for the inside check, make sure to conduct it at least 5 minutes after turning the power off in consideration of electric discharge from a capacitor.

CAUTION	To prevent the electrostatic destruction of semiconductor parts and the printed circuit board, observe the following.
	Allow static electricity to escape by, for example, touching the metal parts of the case with your hand before touching the equipment, the conductor of wire and/or the printed circuit board.

Notice	About cleaning of plastic parts
● Plastic parts may be melted or deformed when they are subjected to organic solvent (benzin, toluene, kerosene, gasoline, etc.). ● When cleaning them, soak a soft cloth with a small amount of water or diluted mild detergent for home use, and wring it and use for wiping those parts.	

- Daily checks are not enough to keep the proper performance of this product for a long time.
- Perform the periodic check without fail. It is important to keep the proper performance of this product for a long time.
- In the periodic check, check the product thoroughly including checking and cleaning of the inside of this product.
- Conduct the periodic check every 6 months normally. If there is a mass of fine dust, oily smoke, etc. around this product, perform the regular check every 3 months as a guideline.

10.2.1 Check guideline

While details for checking are shown below table, consider any additional check items according to your conditions of use.

Check item	Guideline
Removal of inside dust	● Remove the top panel before cleaning. ● Blow off internally-accumulated dirt and dust by compressed air without moisture included (dry air).
Overall check	Remove the top panel and check the followings and other items that are not covered by the daily check intensively. • The presence of odor, discoloration, and traces of heat generation • Loose connections • Additional fastening
Cables and hoses	Regarding the grounding wire (for this product, base material, etc.), input and output cables, cables for the torch switch, remote control unit, etc., and hoses (for gases, and for water supply and drainage when using the water-cooling torch), check those items that are not covered by the daily check (See page 12-1) intensively.
Inspection and maintenance of consumable parts	When conducting inspection or maintenance, treat the cooling fan and electrolytic capacitor as consumable parts as they have a given electrical and mechanical life respectively. For example, when they are used under the rated specifications, the life of the cooling fan is about 10,000 hours, and that of the electrolytic capacitor is about 8,000 hours. Their actual duration depends on how those items are used by customers.

10.3 Precautions for withstand voltage test and insulation resistance measurement

		**Make sure to work at least 5 minutes after the power is turned off.** The capacitor may still have some voltage left even if the power switch is turned off. To prevent a physical accident caused by an electric shock or a spark,

The withstand voltage test and the insulation resistance measurement shall be performed by service engineers specified by Panasonic representatives, or educated and/or skilled persons who well undersand and/or who are familiar with welders and electricity.
Performing the withstand voltage test and the insulation resistance measurement carelessly may damage this unit as the unit is equipped with semiconductor parts including transistors.

- If your internal regulations define to carry out these test, observe the following ”Test preparation” and “After completion of the test” and (The following procedure is explained under the condition with the top panel and the right and left panel removed.
- Prepare jumper cables (cross section 1.25 mm2 approx.) with a clip to short-circuit each device.
- When cables and connectors are disconnected, put tags or take notes so that they can be re-installed in place correctly.
- See also sections “Circuit diagram”, “Parts layout” and “Parts list”.

10.3.1 Test preparation

■ **Connection cables and signal wires**

(1) Turn off power at distribution box (customer preparation) and then disconnect the input cables from the load side terminal of the distibution box and from the input power terminal of this unit.
Turn off power to all related devices (jigs).

(2) Disconnect cables and signal cables connected to the following terminals and connectors.
- Front: Base metal terminal (-), Torch terminal (+), Feeder connector and Base metal voltage detection terminal.
- Inside: Two jig terminals

■ **Primary side**

(3) Short-circuit the unit input terminals collectively (total 3 terminals).

(4) Turn the power switch ON side.

(5) Short-circuit between the anode (wire #7) and cathode (wire #8) of the diode D1
The capacitors may still have voltage. Wait for 5 minutes or more after the power is OFF before starting to work.

(7) Short-circuit load side terminal of IGBT-Q1(wire #11), load side terminal of IGBT-Q2 (wire #10), load side terminal of IGBT-Q3 (wire #12). and load side terminal of IGBT-Q4 (wire #13).

(8) Collectively short-circuit the above 3, 5 and 7.

■ **Secondary side**

(9) For diode D2 and D3(D2,D3,D4,D5 for 500GL 4), short-circuit their own anode and cathode respectively.

(10) Short-circuit the base metal (-) terminal (128) and the torch (+) terminal (130).

■ **Primary and secondary side**

(11) Further collectively short-circuit the above 8 and 10.

■ **Case ground cable**

(12) Disconnect two case ground cables on the middle plate and three case ground cables on the bottom plate.

■ **PC board**

(13) Disconnect all the connectors connected to the PC board.

10.3.2 After completion of the test

 **WARNING**	If power is ON without removing the jumper bar for test, devices may be damaged or burnt out.
 **CAUTION**	Unless cables removed for test are returned, the unit may not operate or may malfunction.

Remove all the short-circuited cables for the test and return the disconnected cables as they were according to the following procedure.

- Reconnect the ground cables and connectors on the PC board as they were.
- Return the dust cover, top panel, right panel, and left panel as they were.
- Connect the input power cable to the input terminal and return the terminal cover.
- Connect the input power cable to the power box switch.

11. Troubleshooting

WARNING	**Touching the current-carrying parts may cause a fatal electric shock or burn injury.** To prevent a physical accident, such as an electric shock, burn injury, etc., make sure to observe the followings.
	● To ensure safety, troubleshooting work shall be done by qualified personnel. ● Make sure to turn off the power and other switches of all devices* for safety reasons before taking any actions for correcting an error. *: Includes this product, the distribution box and other related devices (jigs, robots, etc.). ● In case of performing the inside inspection, make sure to work at least five minutes after the power is turned off (for capacitor discharge).

11.1 Error indication

●When a self-diagnosable error occurs, “Err” (for error) and error code can be displayed on the operation panel.

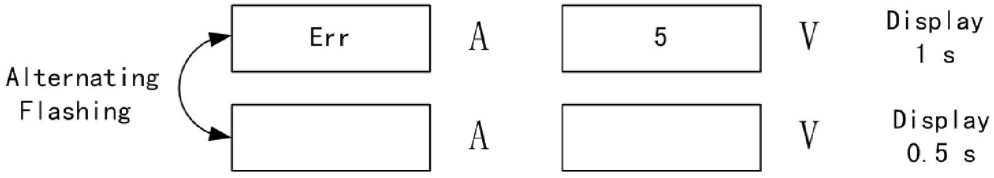

7-segment LED (Occurrence of ERR 5 fault conditions)

See the following table for details of the error codes.

(Note) About “Group” in the table

• Group “A”: It is not necessary to turn power switch OFF. (The displays are automatically turned off when the cause is removed.)

• Group “B”: It is necessary to turn power switch OFF and back ON again. (The displays can NOT be automatically turned off until the power switch is turned OFF even when the cause is removed.)

● after connecting the power source, 7-segment display cannot be shown normally.

Err	S/N	Error type	Group	Probable causes and remedy
Err	001	emergency stop	B	The connection of external equipment emergency stop on the output terminal block. ● Turn power switch OFF, refer to the list below and remove the cause and then turn power switch ON again. · malfunction from external equipment emergency stop. · malfunction from switch power source PCB in this equipment.
Err	002	secondary over-current error	A	Over-current due to short-circuit in the secondary circuit or so on. ● Turn welding gun switch OFF and remove the cause of the over current.
Err	003	temperature rise error	A	Rise in temperature inside this welding power source. Please do NOT turn OFF the machine before the temperature in the Product decreases. <Remedy> Keep the input power in no load state and wait for a while. The error code indication automatically turned off when the power source is cooled down. Check and remove causes of over-heat. • Over duty cycle, • Air flow blocking at ventilation and cooling fan windows If the problem cannot be solved by the above-mentioned activities, please clean the cooling fan.

Err	S/N	Error type	Group	Probable causes and remedy
Err	004	primary over-voltage	B	The input voltage exceeds allowable range (higher than AC 437V). ● After input voltage returns within the allowable range, then turn power switch back ON again.
Err	005	primary under-voltage	B	The input voltage is lower than allowable range (lower than AC 304V) or input power source phase failure happens. ● After input voltage returns within the allowable range, then turn power switch back ON again. Note: when welding machine input power source phase failure happens, apart from ERR-5, the operation PCB shows nothing (i.e. LED indicator and LED display are not lit), or operation PCB LED indicator and LED display alternately flashes.
Err	006	Arc Start error	B	Neither arc is generated nor no-load voltage is detected when the torch switch is turned on. When the "Arc Start" error occurs, the welding current output, motor of the wire feeder and shielding gas flow are stopped automatically. ● Switch off power source switch, remove the cause of the arc ignition error.
Err	007	welding gun switch error	A	The torch switch was turned on before turning on the power switch. ● Turn welding gun switch or inching wire feeding button OFF.
Err	008	current detection error	B	Output current or voltage is detected when the power switch is turned on. <Remedy> Turn power switch OFF and then check the followings to remove the cause(s). • This product is defective. • Check if the current or voltage is applied to the secondary side of this product from an external device.
Err	010	external interruption 1	A	The external equipment the connecting to output terminal block receives interruption signal " temporary stop 1". ●Remove the cause on the external equipment side.
Err	011	external interruption 2	A	The external equipment the connecting to output terminal block receives interruption signal " temporary stop 2". ●Remove the cause on the external equipment side.
Err	019	wire adhesion error	B	When the Product works with special purpose machine or robot, wire adhesion at the end of welding. ● switch off power source switch and cut the welding wire.
Err	025	motor encoder error	B	Abnormal encoder feedback ● Switch off power source switch to eliminate arc abnormal ignition factor.
Err	028	wire feeder over-current error	B	The wire feeding route is blocked, causing over-load of the motor. ●clean the wire feeding route (contact tip, wire feeding liner and wire feeding roller etc.).

●If alarm message listed below frequently prompts, please contact with Distributor.

Err	S/N	Error type	Group	Probable causes and remedy
Err	030	RAM error	B	Abnormal RAM. ● restart power source, confirm the data of F. Adj menu. If data disappears, please set again.
Err	050	communication error	B	Abnormal communication. ● restart power source.

11.2 Troubleshooting table

* In the case of welding errors without any error (Err) indication, refer to the following table to search for their causes..

Check item	Probable causes	● Blowholes	● Welded tip	● Wire runs into the base metal	● Bead turns black.	● Lack of arc occurs.	● Unstable arc start	● No wire feeding	● No gas supply	● Gas flows without stop
Distribution box (Input protection device)	• Switch is not ON. (Tripping of circuit breaker) • Blown fuse. • Tripping of circuit breaker. • No phase.	○	○	○						
Input cable	• Cable is disconnected or severed. • Loose connections.	○	○	○						
This product	• Switch is not ON. • Tripping of circuit breaker.	○	○	○						
Gas cylinder Gas regulator	• Main cock is not open. • Gas nearly runs short. • Insufficient flow rate setting. • Loose connections.		○			○				○
Gas hose	• Loose connections • Hose is damaged.		○							○
Motor (8A) fuse (on the front panel)	• Blown fuse	○		○						
Wire feeder	• Size of the wire for feed roller/SUS tube is wrong. • Crack, clogging or breakage at the feed roller. • Insufficient fastening of pressure rod. • Accumulation of wire powder at SUS tube inlet. • Fuse for voltage detection wire is blown.			○	○	○	○		○	
Torch cable	• Cables (for power and torch switch) are severed. • Loose connection to the wire feeder. • Signs of dropping impact	○	○	○		○		○		
	• Torch cable is bent at an acute angle or coiled.				○	○	○		○	
Welding torch	• Tip/liner is worn, clogged, distorted or has wire with wrong wire size. • Torch cable is bent at an acute angle or coiled.				○	○	○		○	
	• Tip/nozzle/insulation tube: Loose connection • Loose connection of the torch body to the connector fittings.						○			○
Base metal cables	• Cross section area is too small. • Loose connection. • Poorly energized base metal.				○	○	○			
Welding conditions	• Improper welding conditions, such as welding current/voltage, torch angle, welding speed, wire extension length. • Wrong wavelength control.				○	○	○	○	○	
Base metal surface and wire extension	• Attachment of oil, dirt, rust or painting film.				○	○	○	○		○

12. Parts list

12.1 Parts list for 350GL4

The digital S/N is in accordance with the same on parts configuration diagram.

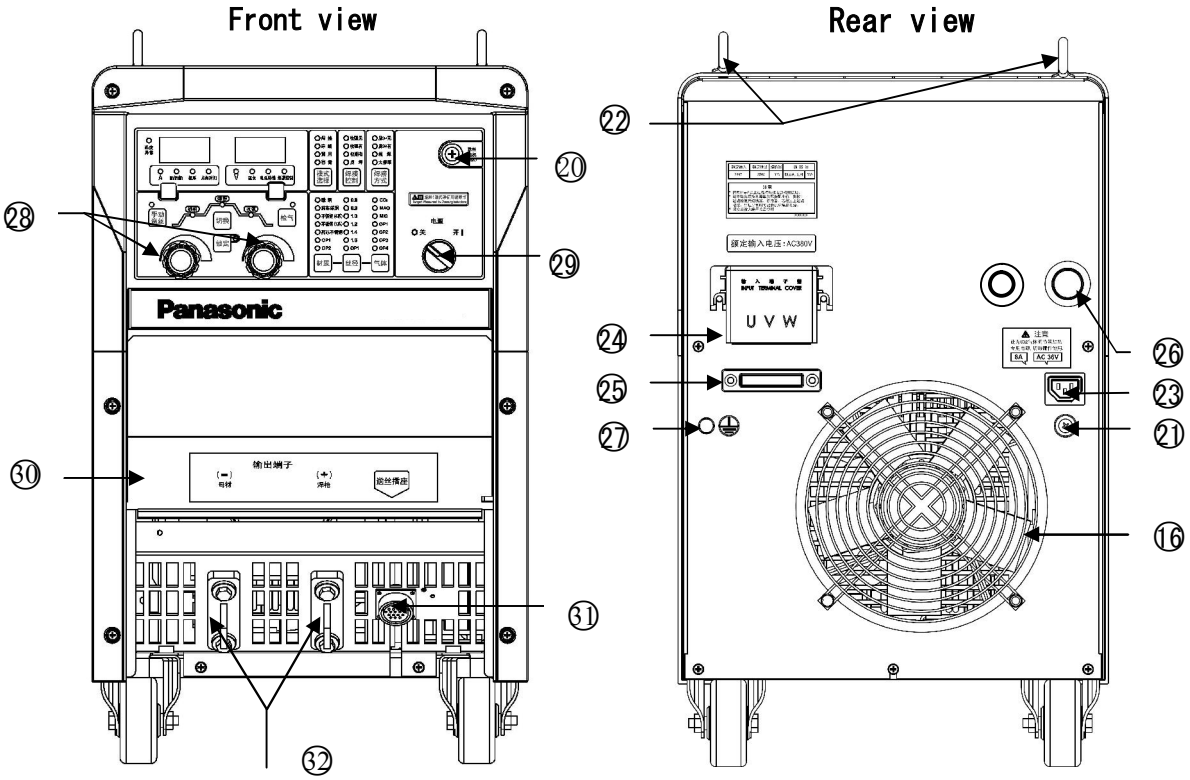

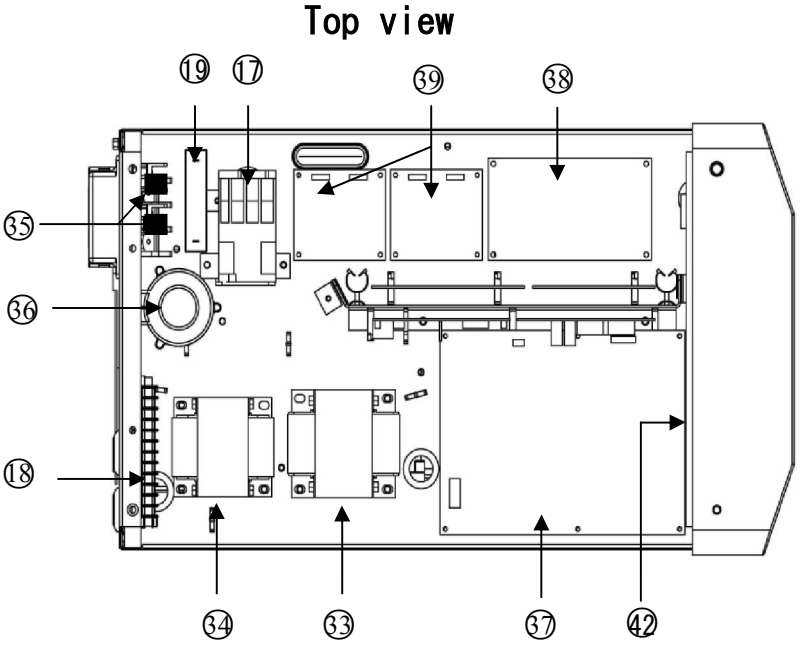

Right view

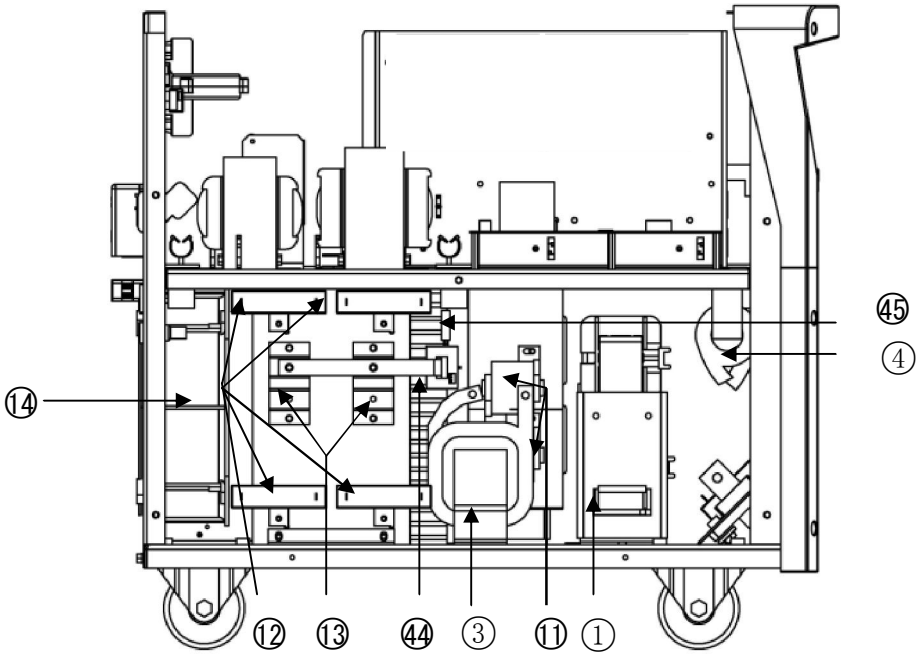

Left view

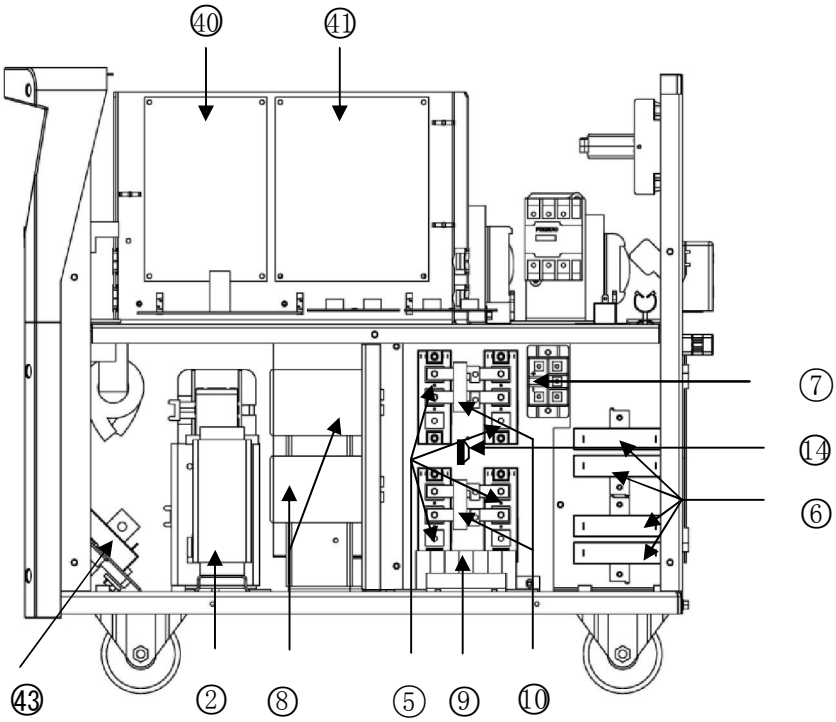

•YD-350GL 4

The No. column and digital S/N are in accordance with the same on parts configuration diagram.

S/N	Symbol	Part Name	Part Number	Quantity	Remarks
1	MTr	Main Transformer	TSMTU211	1	
2	L1	FCH Unit	TSMLU185	1	
3	L2	Inductor	TSMLU183	1	
4	L3	Ring Inductor	TSMLU184	1	
5	Q1～Q4	IGBT	2MBI100TA065	4	
6	R302 ～ R305	Cement Resistor	RX274H40W5R0JW	4	
7	D1	Rectifier Bridge	MDS60(C)-16	1	
8	C300,C301	Electrolytic Capacitor	ECG2WWP272VD106CA	2	
9	LF3	Current Sharing Ring Assembly	TSML0089	1	
10	R300,R301	Discharge Resistor	RJG274L7W223J	2	
11	C4,C5	Anti-Magnetic Biasing Capacitor	MKPHR1.5UF750VAC	2	
12	R4～R7	Secondary Power Resistor	RX274H40W5R0JW	4	
13	D2,D3	Diode Module	FRS300BA70	2	
14	Thp1	Thermal Relay	0HD3-75B02	1	
15	FAN	Fan	200FZY6-S(FC)	1	
16	FAN	Fan Protective Cover	WZ-TG22580	1	
17	MS	AC Contactor	PT323001LS	1	
18	TM1,TM2	Output Terminal Block	T64-T12	2	
19	R14	Cement Resistor	SFW40A471	1	
20	FU5	Fuse	61NR080H	1	(wire feeder fuse)
		Fuse Holder	FHS07F	1	
21	FU2	Fuse	61NR030H	1	(heater fuse)
		Fuse Holder	FHS07F	1	
22		Eye Bolt	R825M8	2	
23	CO2	Heater Socket	MT25B3YP	1	
24		Input Terminal Assembly	DET00019-02	1	
		Protective Cover	TSM00386-02	1	

•YD-350GL4

S/N	Symbol	Part Name	Part Number	Quantity	Remarks
25		Input Cord Bracket	TSM20368-01 TSM20369-01	1 each	
26		Rubber Cover	SG30T	2	
27		Grounding Bolt		1	
28		Knob	TSMH0062	2	
29	SW1	Power Source Switch	AR22PR-230B	1	
30		Output Protective Cover	TSMK6122-01	1	
31	CO1	16 Cored Socket	WS28K16Z-1.6	1	
32		Output Terminal	TSM15748	2	
33	TR2	Control Transformer	TSMU0782-口口	1	
34	TR1	Control Transformer	TSMU0913-口口	1	
35	FU7, FU8	Fuse	660GH63ULTC	2	
36	LF1	Input Filtering Assembly	TSMW2271-口口	1	
37	PC Board	Switch Power Source PC Board	TSMP5760E-口口	1	
38		Wire Feeding PC Board	TSMP6550-口口	1	
39		Drive PC Board	TSMP5491C-口口	2	
40		CPU Pc Board	TSMPA246-口口	1	
41		Interface PC Board	TSMP6383-口口	1	
42		Operation PC Board	TSMPA245-口口	1	
43	R1,R2	Cement Resistor	SFW40A201	2	
44	CT	Current Sensor	L03S400D15WM	1	
45	SH2	Shunt	F400A	1	

12.2 Parts list for 500GL4

The digital S/N is in accordance with the same on the parts list.

Front view

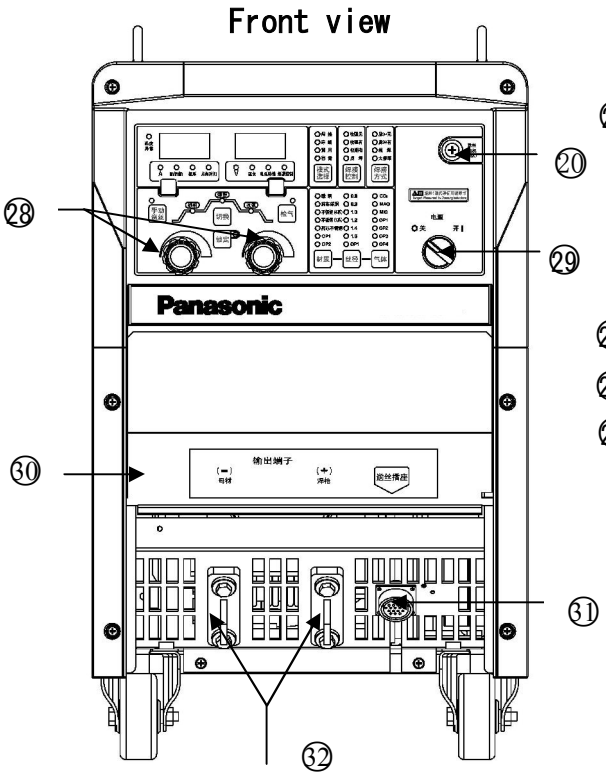

Rear view

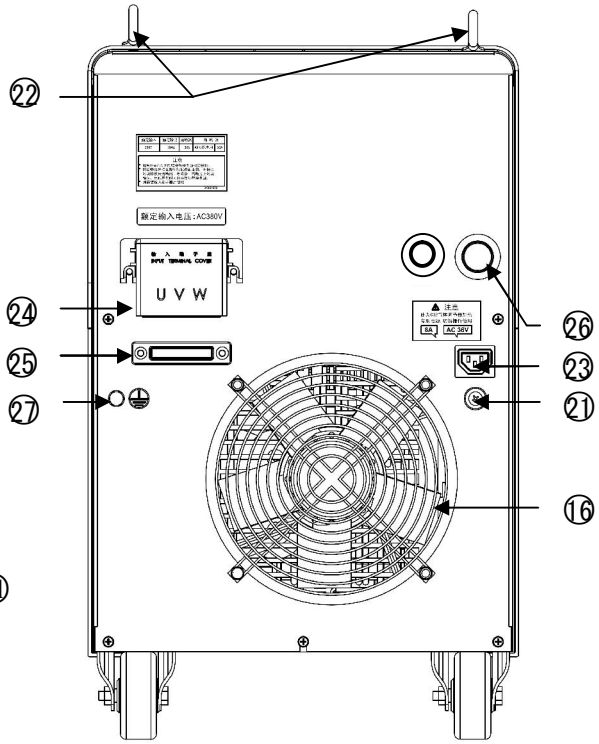

Top view

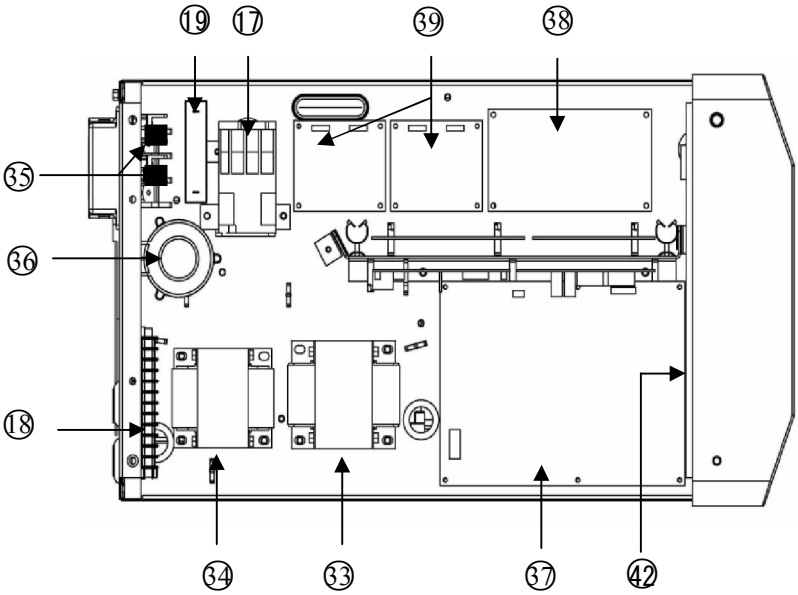

Right view

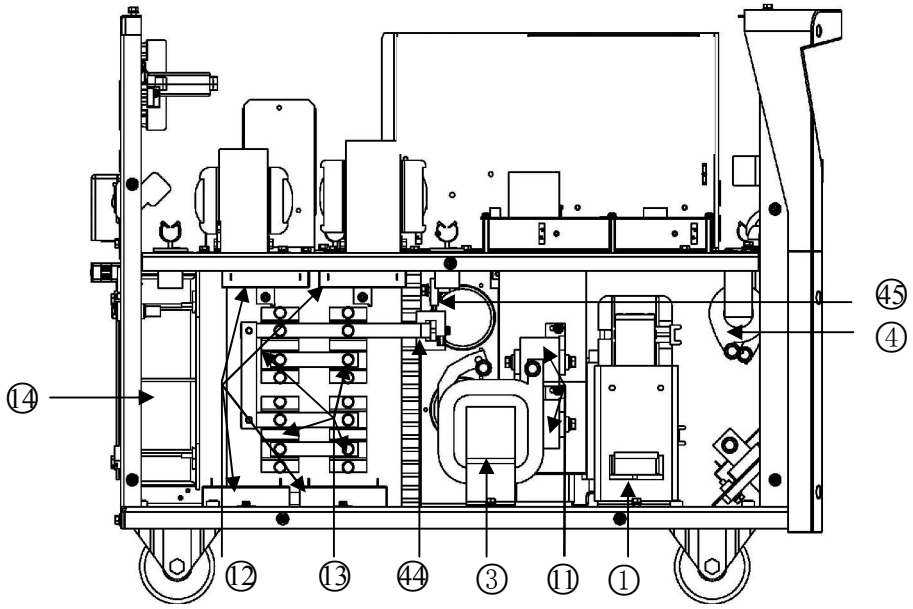

Left view

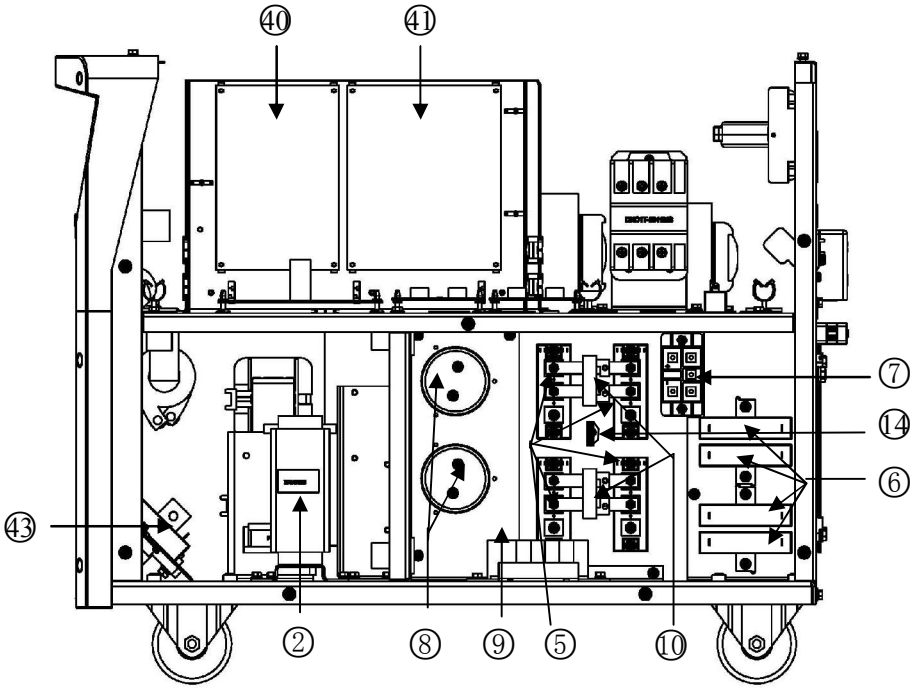

•YD-500GL4

The No. column digital S/N is in accordance with the same on parts configuration diagram.

S/N	Symbol	Part Name	Part Number	Quantity	Remarks
1	MTr	Main Transformer	TSMTU213	1	
2	L1	FCH Unit	TSMLU185	1	
3	L2	Inductor	TSMLU187	1	
4	L3	Ring Inductor	TSMLU188	1	
5	Q1～Q4	IGBT	2MBI100TA065	4	
6	R302～R305	Cement Resistor	RX274H40W5R0JW	4	
7	D1	Rectifier Bridge	MDS100(D)-16	1	
8	C300,C301	Electrolytic Capacitor	ECG2WWP272VD106CA	2	
9	LF3	Current Sharing Ring Assembly	TSML0089	1	
10	R300,R301	Discharge Resistor	RJG274L7W223J	2	
11	C4,C5	Anti-Magnetic Biasing Capacitor	MKPHR1.5UF750VAC	2	
12	R4～R7	Secondary Power Resistor	RX274H40W5R0JW	4	
13	D2,D3	Diode Module	FRS300BA70	4	
14	Thp1	Thermal Relay	0HD3-83B02	1	
15	FAN	Fan	200FZY6-S(FC)	1	
16	FAN	Fan Protective Cover	WZ-TG22580	1	
17	MS	AC Contactor	NDC1T-5011MS	1	
18	TM1,TM2	Output Terminal Block	T64-T12	2	
19	R14	Cement Resistor	SFW40A471	1	
20	FU5	Fuse	61NR080H	1	(wire feeder fuse)
		Fuse Holder	FHS07F	1	
21	FU2	Fuse	61NR030H	1	(heater fuse)
		Fuse Holder	FHS07F	1	
22		Eye Bolt	R825M8	2	
23	CO2	Heater Socket	MT25B3YP	1	
24		Input Terminal Assembly	DET00019-02	1	
		Protective Cover	TSM00386-02	1	

•YD-500GL4

S/N	Symbol	Part Name	Part Number	Quantity	Remarks
25		Input Cord Bracket	TSM20368-01 TSM20369-01	1 each	
26		Rubber Cover	SG30T	2	
27		Grounding Bolt		1	
28		Knob	TSMH0062	2	
29	SW1	Power Source Switch	AR22PR-230B	1	
30		Output Protective Cover	TSMK6122-01	1	
31	CO1	16 Cored Socket	WS28K16Z-1.6	1	
32		Output Terminal	TSM15748	2	
33	TR2	Control Transformer	TSMU0782-□□	1	
34	TR1	Control Transformer	TSMU0913-□□	1	
35	FU7, FU8	Fuse	660GH80ULTC	2	
36	LF1	Input Filtering Assembly	TSMW2271-□□	1	
37	PC Board	Switch Power Source PC Board	TSMP5760E-□□	1	
38		Wire Feeding PC Board	TSMP6550-□□	1	
39		Drive PC Board	TSMP5491C-□□	2	
40		CPU Pc Board	TSMPA248-□□	1	
41		Interface PC Board	TSMP6383-□□	1	
42		Operation PC Board	TSMPA245-□□	1	
43	R1,R2	Cement Resistor	SFW40A201	2	
44	CT	Current Sensor	L03S400D15WM	1	
45	SH2	Shunt	F600A	1	

13. Circuit diagram

13.1 Circuit diagram for 350GL4

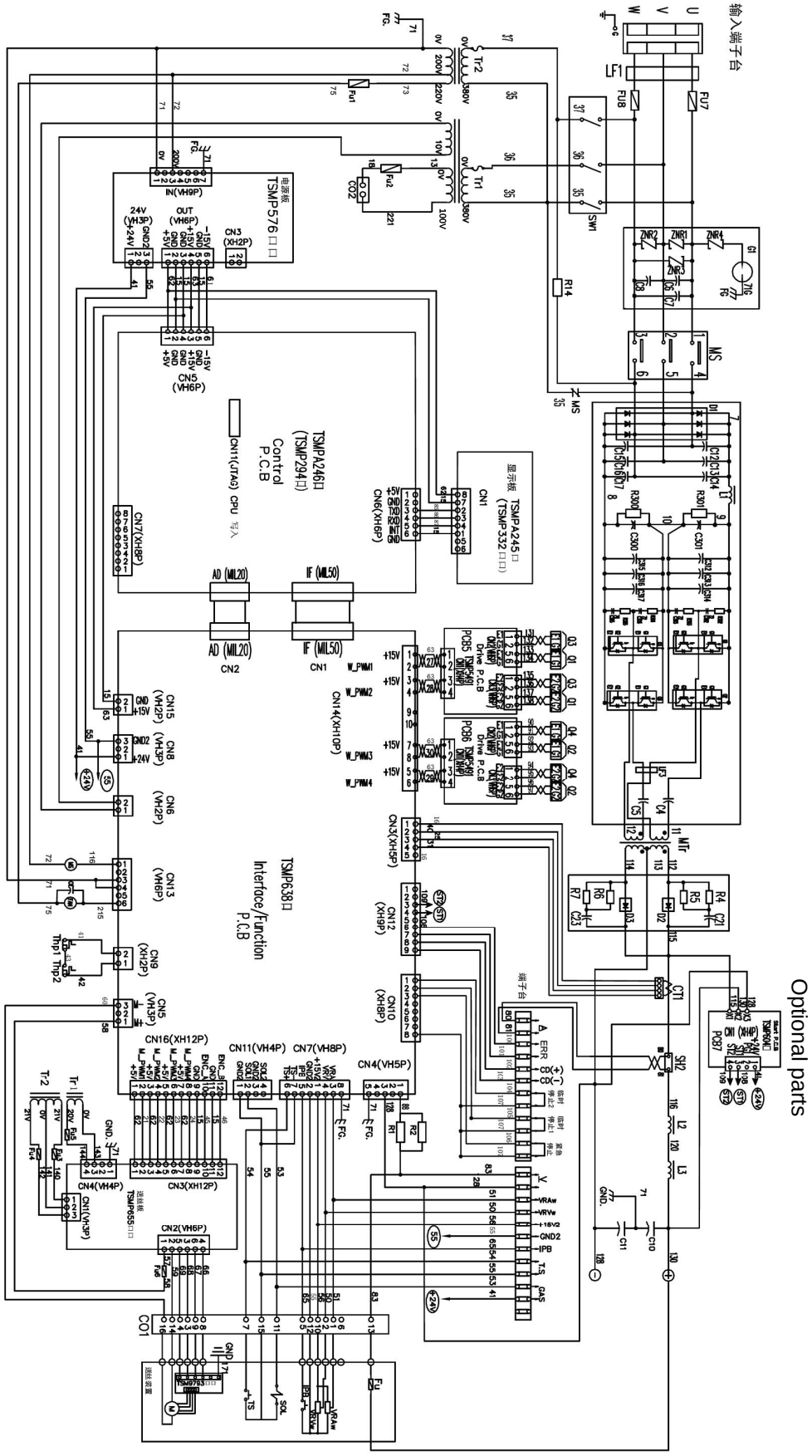

13.1. Circuit diagram for 500GL4

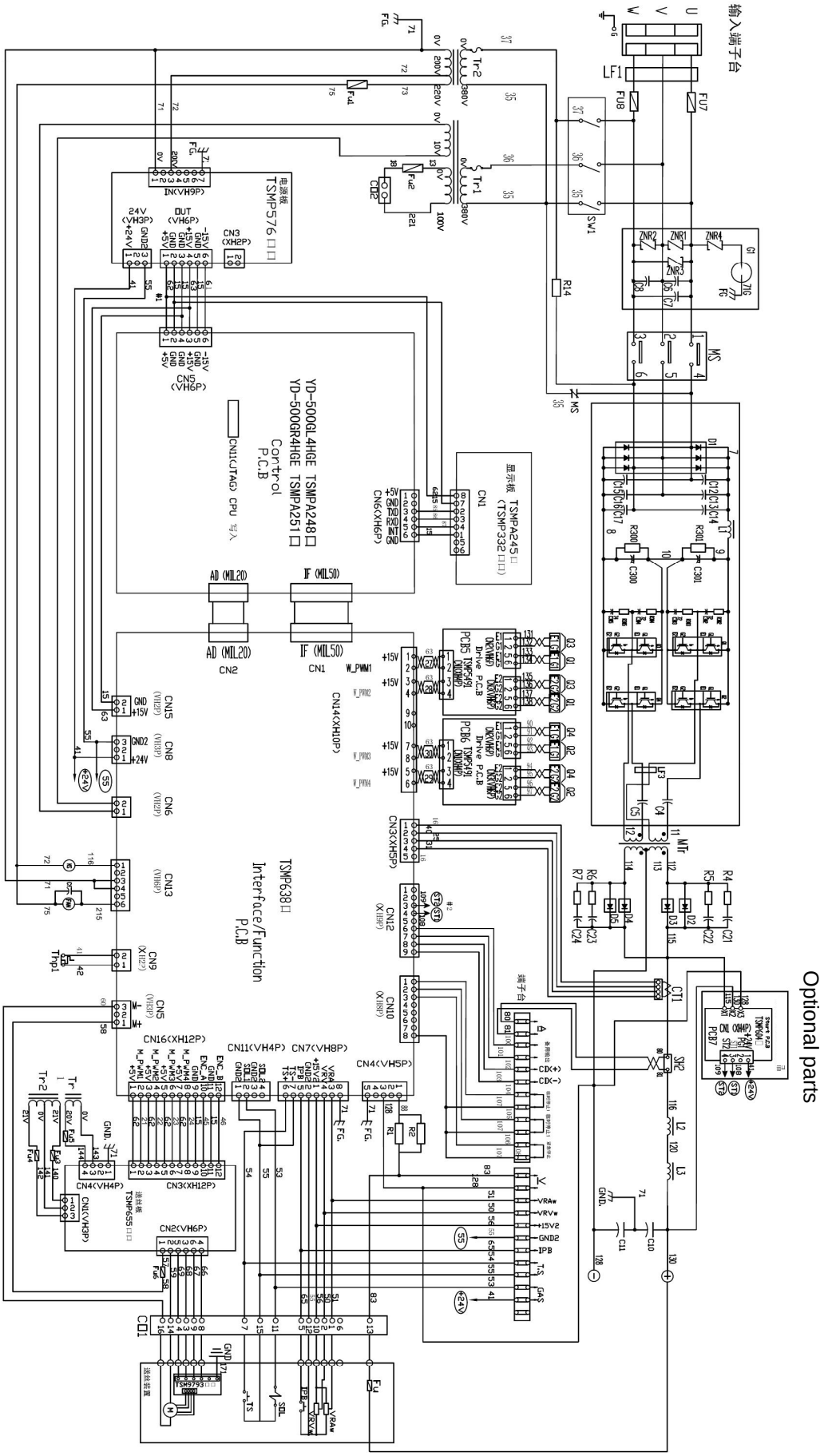

14. Appendix

Followings are rough indications of standard welding conditions as reference data. In actual welding operation, it is necessary to set values in consideration of shape of the workpiece, welding position and so on.

14.1 CO_2 welding conditions table: Solid wire (Reference)

Butt Joint Welding
(Square groove joint)

(At low-speed)

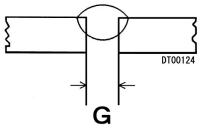

Thickness (mm)		Route gap G (mm)	Wire diameter (mm)	Current (A)	Voltage (V)	Speed (cm/min)	Tip-to-work distance (mm)	Gas flow (L/min)
0.8		0	0.8, 0.9	60-70	16-16.5	50-60	10	10
1.0		0	0.8, 0.9	75-85	17-17.5	50-60	10	10-15
1.2		0	0.8, 0.9	80-90	17-18	50-60	10	10-15
1.6		0	0.8, 0.9	95-105	18-19	45-50	10	10-15
2.0		0-0.5	1.0, 1.2	110-120	19-19.5	45-50	10	10-15
2.3		0.5-1.0	1.0, 1.2	120-130	19.5-20	45-50	10	10-15
3.2		1.0-1.2	1.0, 1.2	140-150	20-21	45-50	10-15	10-15
4.5		1.0-1.2	1.0, 1.2	170-185	22-23	40-50	15	15
6	Front	1.2-1.5	1.2	230-260	24-26	40-50	15	15-20
	Back	1.2-1.5	1.2	230-260	24-26	40-50	15	15-20
9	Front	1.2-1.5	1.2	320-340	32-34	40-50	15	15-20
	Back	1.2-1.5	1.2	320-340	32-34	40-50	15	15-20

Butt Joint Welding
(Square groove joint)

(With backing)

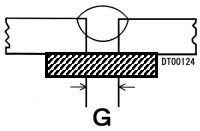

Thickness (mm)	Route gap G (mm)	Wire diameter (mm)	Current (A)	Voltage (V)	Speed (cm/min)	Tip-to-work distance (mm)	Gas flow (L/min)	Copper backing
0.6	0	0.6	40	16	60	10	15-20	*1
0.8	0	0.6	40	16.5	45	10	15-20	
	0	0.8	80-90	18-19	45-50	10	15-20	
1.0	0	0.9	50	18	45	15	15-20	
1.2	0	0.8	60	18	45	15	15-20	
	0-0.5	0.9	90-120	19-20	45-50	10	15-20	
1.6	0	0.9	95-105	18-19	45-50	10	15-20	
	0-0.5	1.2	120-140	19-20	40-50	10	15-20	
2.3	0-0.8	0.9	100-140	19-21	35-45	10	15-20	*2
	0-1.2	1.2	130-150	19-21	35-45	10	15-20	
3.2	0-1.5	1.2	130-180	20-23	30-35	10-15	15-20	
4.5	1-2	1.2	150-200	21-24	40-45	10-15	15-20	
6	0-0.8	1.2	280-330	28-36	35-45	15-20	15-20	*3
	0-0.8	1.6	380-420	37-38	40-45	15-20	15-20	
9	0-0.8	1.2	320-340	32-34	45-50	15-20	15-20	

*1: Thickness: 3.2-6 mm

*2: Thickness: 6-8 mm, Groove depth: 1-2 mm, Groove width: 5-6 mm

*3: Thickness: 12 mm or more, Groove depth: 3-4 mm, Groove width: 6-8 mm

Fillet Welding (Horizontal position)	Thickness (mm)	Leg length (mm)	Wire diameter (mm)	Current (A)	Voltage (V)	Position ① / ②	Speed (cm/min)	Tip-to-work distance (mm)	Gas flow (L/min)
(At low-speed) 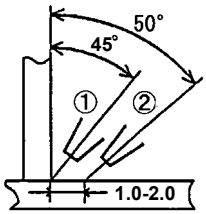	1.0	2.5-3	0.8, 0.9	70-80	17-18	①	50-60	10	10-15
	1.2	3-3.5	0.9, 1.0	85-90	19-19	①	50-60	10	10-15
	1.6	3-3.5	1.0, 1.2	100-110	18-19.5	①	50-60	10	10-15
	2.0	3-3.5	1.0, 1.2	115-125	19.5-20	①	50-60	10	10-15
	2.3	3-3.5	1.0, 1.2	130-140	19.5-21	①	50-60	10	10-15
	3.2	3.5-4	1.0, 1.2	150-170	21-22	①	45-50	15	15-20
	4.5	4.5-5	1.0, 1.2	180-200	23-24	①	40-45	15	15-20
	6	5-5.5	1.2	230-260	25-27	①	40-45	20	15-20
	8, 9	6-7	1.2, 1.6	270-380	29-35	②	40-45	25	20-25
	12	7-8	1.2, 1.6	300-380	32-35	②	35-40	25	20-25

Fillet Welding (Flat position)	Thickness (mm)	Leg length (mm)	Wire diameter (mm)	Current (A)	Voltage (V)	Speed (cm/min.)	Tip-to-work distance (mm)	Gas flow (L/min)
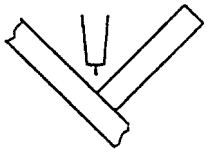	1.0	3	0.9	60-65	16-17	30	10	10-15
	1.2	3-3.5	0.9	70-80	17-18	40-50	10	10-15
	1.6	3.5-4	0.9	90-130	19-20	40-50	10	10-15
	2.3	4-4.5	1.2	120-160	20-21	40-45	10	10-20
	3.2	4-5	1.2	150-200	21-25	35-45	10-15	10-20
	4.5	6-6.5	1.2	270-300	28-30	40-45	15-20	10-20
	6	4-4.5	1.2	300-330	30-35	60-70	15-20	10-20
		6-7	1.2	300-350	30-36	40-45	15-20	10-20
		6	1.6	380-400	37-38	45-50	15-20	10-20
	8	6	1.2	300-350	30-36	40-45	15-20	10-20
		8-9	1.6	430-480	38-42	40-45	15-20	10-20
	12	10	1.6	430-480	38-42	30-40	15-20	10-20
		12-13	1.6	450-480	38-42	25-30	20-25	10-20

14.2 MAG welding conditions table: Solid wire (Reference)

* MAG gas: 80% argon and 20% CO_2

Butt Joint Welding (Square groove joint)	Thickness (mm)	Route gap G (mm)	Wire diameter (mm)	Current (A)	Voltage (V)	Speed (cm/min)	Tip-to-work distance (mm)	Gas flow (L/min)
(At low-speed) 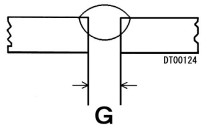	0.4	0	0.4	20	15	40	10	10
	0.6	0	0.4, 0.6	25	15	30	10	10
	0.8	0	0.6, 0.8	30-40	15	40-55	10	10
	1.2	0	0.8, 0.9	60-70	15-16	30-50	10	10-15
	1.6	0	0.8, 0.9	100-110	16-17	40-60	10	10-15
	3.2	1.0-1.5	0.8, 1.2	120-140	16-17	25-30	15	10-15
	4.0	1.5-2.0	1.0, 1.2	150-160	17-18	20-30	15	10-15

Fillet Welding (Horizontal position) (At low-speed)	Thickness (mm)	Leg length (mm)	Wire diameter (mm)	Current (A)	Voltage (V)	Position ① / ②	Speed (cm/min)	Tip-to-work distance (mm)	Gas flow (L/min)
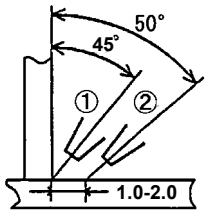	0.6	2	0.4, 0.6	70-80	17-18	①	50-60	10	10-15
	1.0	2-2.5	0.6, 0.8	85-90	19-19	①	50-60	10	10-15
	1.6	3	0.6, 0.8	100-110	18-19.5	①	50-60	10	10-15
	2.4	3.5	0.8-1.0	115-125	19.5-20	①	50-60	10	10-15
	3.2	4	0.8-1.2	130-140	19.5-21	①	50-60	10	10-15

14.3 Arc spot welding conditions table (Reference)

Thickness (TopxBottom)	Wire diameter (mm)	Welding time (s)	Welding current (A)	Welding voltage (V)	Bead diameter (mm)	Tip-to-work distance (mm)	Gas flow rate (L/m)
0.6 x 0.6	0.6	0.5 - 0.75	100	22 - 24	8	10	12
0.6 x 0.6	0.8	0.75 - 1.0	95	22	7	12	12
0.8 x 0.8	0.6	1.25 - 1.5	100	22 - 24	10	10	12
0.8 x 0.8	0.8	0.5 - 0.75	130	22 - 24	9	12	12
1.0 x 1.0	0.8	1.25 - 1.5	155	24 - 26	12	12	12
1.0 x 1.0	1.2	0.25	260	25	10		16 - 20
1.2 x 1.2	0.8	1.75	155	24 - 26	12	12	12
1.2 x 2.3	1.6	0.6	320	31		15	16 - 20
1.2 x 3.2	1.2	0.35	320	32	15		16 - 20
1.2 x 3.2	1.6	0.6	350	32		15	16 - 20
1.2 x 6.0	1.6	1.1	390	33		15	16 - 20
1.6 x 1.6	1.2	0.8	320	32	16		16 - 20
1.6 x 2.3	1.6	0.6	340	32		15	16 - 20
1.6 x 3.2	1.6	0.7	370	33		15	16 - 20
1.6 x 6.0	1.6	0.7	460	35		15	16 - 20
1.6 x 3.2	1.6	1.0	380	32		15	16 - 20
2.3 x 3.2	1.6	2.0	480	35		15	16 - 20
3.2 x 3.2	1.6	0.5	500	35	17		16 - 20
3.2 x 4.5	1.6	1.5	400	32		15	16 - 20
4.5 x 4.5	1.6	1	550	37	22		16 - 20

14.4 Welding conditions memorandum

It is recommended to keep a note of the user-created welding conditions for your convenience.

Those custom welding conditions in this unit by allocating a channel number to each of them.
* Put the data on the below “Channel list” once stored.

<Make a copy of the following table for each welding condition.>

Channel (CH) number	Material to be welded	Remarks

Prepared on	Prepared by

● Welding conditions

UNITARY / INDIVIDUAL

	INITIAL	WELD	CRATER
Welding current	(A)	(A)	(A)
Welding voltage	(±) (V)	(±) (V)	(±) (V)

SPOT TIME	WAVEFORM CONTROL
(s)	

● F. ADJ settings (FUNCTION)

Item	Contents
P00	
P01	
P02	
P03	
P04	
P05	
P06	

● DIP switch (DSW1) settings

C.REP	(Crater repeat)	ON	OFF
ARC.CTL	(Leg length control)	ON	OFF
P.BBK	(Burnback 2)	ON	OFF

● MATERIAL/WIRE DIA/GAS settings

Item	Contents
MATERIAL	MS-SOLID MS-FCW SUS-SOLID SUS-FCW OPTION
WIRE DIA	1.2 mm 1.0 mm 0.9 mm 0.8 mm
GAS	CO2 Ar MIX Ar

● CONTROL settings

Item	Contents
CONTROL	NO CRATER CRATER INI.&CRATER ARC SPOT

■ Channel list

Channel (CH) number	Material to be welded	Remarks	Prepared on	Prepared by
1				
2				
3				
4				
5				
6				
7				
8				
9				

【The standard of the product】

This product is designed and manufactured according to GB15579.1-2013/IEC 60974-1 2005. This product may not conform to the local laws and standards of other countries. Please be absolutely sure to consult with us before attempting to relocate or resell this product to other countries.

【ATTENTION: The disposal of the product】

In case of disposal of the product, please sign the assignment agreement on disposal treatment with the authorized organization and then assign the organization to dispose the product.

【NOTICE：Machine export to Europe】

This product does not meet the requirements specified in the EC Machinery Directive which is the EU safety ordinance that will be enforced starting on January 1 , 1995. Please bear in mind that this product may not be brought as is into the EU after January 1, 1995. The same restriction also applies to any country which has signed the EEA accord.

Please be absolutely sure to consult with us before attempting to relocate or resell this product to or in any EU member state or any other country which has signed the EEA accord.

Panasonic Welding Systems (Tangshan) Co., Ltd.
Add：No.9 Qingnan Road, New & Hi-Tech Development Zone, Tangshan,Hebei, China
Post Code：063020
Tel：（0315）3206017 3206066
Fax：（0315）3206070 3206018
URL：http://pwst.panasonic.cn/
© Panasonic Welding Systems (Tangshan) Co., Ltd.2012

2017-03
Printed in China